Welcome to Bluebonnet Electric Cooperative

Bluebonnet Electric Cooperative Inc. was incorporated in 1939 as the Lower Colorado River Electric Cooperative. The name was changed to Bluebonnet Electric Cooperative, Inc. in 1964 to enhance a separate identity from the Lower Colorado River Authority (LCRA).

Bluebonnet is one of the largest electric cooperatives in Texas, with a 3,800 square mile service territory, which includes all or part of 14 counties, serving more than 120,000 meters. Five Member Service Centers are located throughout Bluebonnet's service territory to assist members with issues ranging from bill payment to service installation. A distribution cooperative, Bluebonnet purchases most of its power wholesale from LCRA. Bluebonnet operates and maintains over 12,000 miles of distribution lines. The organization owns 26 substations and purchases power at 22 additional substations owned by LCRA.

Bluebonnet provides this packet to all developers and their agents and it should be used as a guide in planning the installation of electrical equipment for receiving electrical power from Bluebonnet's distribution system.

The information presented is subject to change and will be revised periodically to reflect any changes which may develop. Please refer to our website at bluebonnet.coop for any additional information as well as an online source of this packet.

We look forward to working with you as your electrical provider.

Thank you,

Bluebonnet Project Coordination Staff

Development Information Request Form

SUBDIVISION or PROJECT NAME:_____
LOCATION OF PROJECT:_____
DEVELOPER'S NAME:_____
REPRESENTED BY:_____PHONE:_____
E-mail:_____
MAILING ADDRESS:_____
_____
ENGINEERING FIRM: _____
REPRESENTED BY:_____PHONE:_____
E-mail:_____

TYPE OF PROJECT: (Check all that apply)	SECTION (Insert Section #)	NUMBER OF LOTS (In this section)	TOTAL LOTS (In all sections)
☐ RESIDENTIAL	_____	_____	_____
☐ APARTMENTS	_____	_____	_____
☐ MOBILE HOME/RV PARK	_____	_____	_____
☐ COMMERCIAL	_____	_____	_____
☐ OTHER_____	_____	_____	_____

Taxing jurisdiction(s) and entities in which development falls (ie. City Limits, County, etc.) as well as physical (911) Address of Development _____
Estimated number of units to be constructed and occupied within the first 12 months. _____
Anticipated total project completion date. _____

OTHER UTILITY PROVIDERS (Company Name)
- ☐ WATER_____
- ☐ GAS (YES or NO)_____
- ☐ CABLE/ INTERNET_____
- ☐

WIDTH OF PUE _____

ASSIGNMENT OF ELECTRICAL UTITLITIES WITHIN THE PUE
- ☐ 3' ASSIGNMENT INTO THE PUE
- ☐ 7' ASSIGNMENT INTO THE PUE
- ☐ OTHER_____

LOAD EXPECTATIONS: (Check All That Apply)
- ☐ LIFT STATION/WASTE WATER PLANT
- ☐ WATER WELL
- ☐ HOME SIZES FROM_____TO_____SQ FT.
- ☐ AMENITY CENTER, PARKS, CLUB HOUSE
- ☐ COMMERCIAL SITES WITHIN DEVELOPMENT
- ☐ STREETLIGHTING – Responsible party for monthly lighting charges _____
- ☐ IRRIGATION SYSTEMS
- ☐ OTHER:_____

By signing this form, you are acknowledging receipt and understanding of this packet and you agree to abide and comply with all requirements and policies within.

_____ _____
Developer / Agent / Owner *Date*

Revised 5-12-2023

Developer's Checklist

Responsibility of Developer:

- ☐ Developer must fill out a Development Information Request Form and submit to Bluebonnet along with design fee if required.
- ☐ Developer is responsible for confirming all Bluebonnet easement requirements with Bluebonnet prior to platting.

Developer must have an engineering firm submit preliminary plan of development in digital (AutoCAD) format to Bluebonnet Engineering Department. These plans must include streets, wet utilities, grading plans, and streetlight locations (if required) as well as any other utilities planned for said development. BBEC will not accept removable media devices for file submissions. For files that are too large to send via email, a BBEC FTP Site will be provided.

- ☐ A design/re-design fee could be required either prior to or following the design process as a result of any changes to design out of original scope of project. This decision will be made at the discretion of Bluebonnet on a case by case basis. These fees are non-refundable and are subject to revision at Bluebonnet's discretion.
- ☐ Prior to Bluebonnet construction, two (2) hard copies of the approved plat must be submitted.
- ☐ Developer must provide and install all underground conduits at road crossings in the designated location per Bluebonnet Crossing Plans and if applicable, all electrical conduits in designated locations per Bluebonnet Construction Plans (see Bluebonnet Specifications in this packet). **If project design includes overhead primary lines and transformers in conjunction with underground meter pedestals, Developer may install road crossings ONLY. Bluebonnet contractors shall complete installation from road crossings to point of termination and this labor and material will be figured into the respective Contribution In Aid of Construction (CIAC).**
- ☐ Developer is responsible for following Bluebonnet inspection policies and procedures prior to and during conduit installation if using his own contractor (see Page 7).
- ☐ Property pins must be set and clearly visible at all lot corners, at developer's expense, prior to Bluebonnet commencing construction.
- ☐ Developer is responsible for submitting contribution-in-aid of construction to cover Bluebonnet's construction costs prior to Bluebonnet commencing construction. Bluebonnet's construction department will contact developer to communicate planned construction start date and duration following project being released for scheduling.
- ☐ Developer is responsible for all right-of-way clearing and grubbing to Bluebonnet specifications. Bluebonnet will clear the right-of-way for proposed overhead facilities for an additional charge to be quoted should developer choose this option. See attached Bluebonnet Specifications.
- ☐ Developer is responsible for ensuring conduit contractor and/or subcontractor adherence to all Bluebonnet Construction Specifications at all times.
- ☐ Developer to provide ALL materials necessary for the conduit system he installs for his Bluebonnet Underground System. Bluebonnet will own these materials after proper installation is certified by a Bluebonnet Inspector.

Developer's Fees and Information

Development Fees

1. A design/re-design fee of could be required either prior to or following the design process should the project change dramatically from its original scope. This decision will be made at the discretion of Bluebonnet on a case by case basis. These fees are non-refundable and are subject to revision at Bluebonnet's discretion.

2. Every request for design and every alteration to all scopes for design services may be considered as an individual request and, therefore are subject to additional fees to be determined by Bluebonnet.

3. When the developer or prospective developer enters into a line extension agreement with Bluebonnet for service, monies received for engineering design estimates of service will be applied to the cost of construction. Bluebonnet's Line Extension Policy can be found in the Bluebonnet Member Welcome Kit or on the "Residential Development" link on our website located at bluebonnet.coop .

4. If the developer or prospective developer does not notify Bluebonnet within a 180 day period of initial design with the intent to proceed, any design fees paid to date will be forfeited and the prospective project will be treated as new.

5. A maintenance fee of $1 per linear foot of trench will be required at the time of contribution by the developer to cover the cost of any necessary repairs in the first year following the completion of Bluebonnet facilities installation.

Street Lighting

1. Bluebonnet agrees to install street lighting at locations within Site designated by the developer as needed to comply with City or County ordinances and regulations.

2. Bluebonnet does not offer any custom lighting solutions at this time. Bluebonnet will install our standard streetlight (see Bluebonnet Specifications in this packet) unless the developer wishes to install his own custom lighting. In this case, Bluebonnet will determine and provide a metering point(s) and the developer will be able to power his custom lighting facilities from this point(s). Developer will be responsible for all installation, operation, and maintenance of custom lighting facilities.

3. Bluebonnet will own, operate, maintain and repair the standard lighting facilities. The monthly charge for street lighting service will be according to the applicable rate schedule for lighting service in the Bluebonnet Electric Cooperative Tariff. Payment of the monthly charge for street lighting service will be the responsibility of the developer or an entity designated by the developer.

Easements / Right of Way

1. Bluebonnet shall be granted, at no cost and in writing on recorded plat, all rights-of-way and easements necessary to serve member, overhead or underground for the erection, maintenance, repair, replacement, removal, or use of all wires, poles, machinery, fixtures, or equipment needed to supply and deliver electric service to the member.

2. Bluebonnet does not allow any member equipment or material to be attached to its property, except where said equipment and/or materials are required to provide electrical service and said equipment and/or material has been authorized by Bluebonnet.

3. Developers and their respective Homebuilders must give Bluebonnet the rights, privileges and easements necessary to construct, operate, repair, replace and perpetually maintain electric facilities located on the member's owned or leased property, and in or on all streets, roads or highways abutting their property. All service lines providing members with electricity and all switches, meters and other appliances and equipment constructed or installed on the property belong solely to Bluebonnet, and Bluebonnet can access the property to repair or service them and, upon discontinuance of service, remove them.

4. Bluebonnet shall, at any time deemed necessary, access any equipment owned and/or operated by Bluebonnet. Any obstructions in a platted public utility easement or exclusive Bluebonnet easement such as landscaping, trees, fences, etc. will be removed if discovered by necessity or inspection. Developers and their respective Homebuilders will adhere to equipment clearance requirements noted in attached specifications AND on equipment labels. If the existing items mentioned above are removed, damaged, etc. by Bluebonnet, Bluebonnet expresses no guarantee, written or implied, that these items will be repaired or replaced. Requests for replacement or repair of landscaping, grass, trees, soil, etc. will be addressed and ruled on by Bluebonnet on a case by case basis. Bluebonnet will make every attempt to disturb existing items as little as possible granted their locations do not violate NESC, NEC, or Bluebonnet clearance requirements.

Front Lot Facilities / Back Lot Facilities

All overhead or underground distribution lines in a subdivision will be built on the front lot lines along public streets. Lines can be constructed along rear lot lines if the following conditions exist.

1. There is an accessible roadway from a public road (dedicated to the public or Bluebonnet) along the route of the proposed distribution line. The dedication will include language that prohibits obstructions being placed in the roadway that would prevent ready access, including but not limited to, fences, storage buildings, etc. and are required to be recorded in the deed restrictions for the applicable area(s).

2. The accessible, dedicated roadway will be an all-weather road, thirty (30) feet in width and constructed of asphalt, concrete, or crushed rock.

3. An all-weather road is defined with adequate culverts, bridges, and base material to support vehicles weighing up to 50,000 pounds during all weather conditions.

Inspection Guidelines and Procedures

1. Developer to provide all pertinent conduit contractor information to Bluebonnet Project Coordinator prior to conduit installation. Bluebonnet Project Coordinator will provide all pertinent Bluebonnet Inspector information to developer.

2. Developer will schedule and conduct a pre-construction meeting between Bluebonnet Inspector and contractor, who will install conduit at a time mutually agreeable to all parties involved.

3. Contractor foreman will review Bluebonnet construction specifications and acknowledge review and receipt prior to trenching and conduit installation.

4. Bluebonnet will respond within 48 hours of contractor notification prior to intended trenching times so inspection dates and times can be coordinated.

5. Trenches will remain open until inspected and approved by Bluebonnet inspector. Upon inspection, contractor will be advised as to what may or may not be backfilled.

6. Bluebonnet retains the right to terminate any conduit installation if inspection reveals non-compliance with Bluebonnet inspection policies, procedures, or specifications until said issues are resolved and approved through re-inspection.

7. Bluebonnet Inspector will inspect all road crossings as they are being installed by Road Contractor.

8. Equipment pad installation and conduit stubs must meet clearance requirements on all sides as outlined in Bluebonnet Specifications.

9. Developer must ensure that his conduit contractor cooperates with Bluebonnet's Inspector and corrects any problems noted. Otherwise, the Bluebonnet certification of the conduit system will be withheld and Bluebonnet's installation of electrical facilities cannot commence. Developers who fail to facilitate prompt resolution to conduit installation problems noted by Bluebonnet's Inspector will not be allowed to install conduit for Bluebonnet on existing or future projects.

10. Developer or his/her contractor is responsible for acquiring any and all permits and remitting any necessary fees for trench and conduit installation (excavation plans, traffic control plans, digging permits, etc.)

BLUEBONNET INSPECTORS

Carl Miller – 979-540-6495, carl.miller@bluebonnet.coop
Jose Hernandez – 720-670-7299 jose.hernandez@bluebonnet.coop
Tim Mittasch – 979-540-7159 tim.mittasch@bluebonnet.coop
Kenneth Roush – 512-468-5088 kenneth.roush@bluebonnet.coop
Jose Villarreal – 512-988-1885 jose.villarreal@bluebonnet.coop
Martin Dorantes – 512-748-4453 martin.dorantes@bluebonnet.coop

MEMBER RESPONSIBILITY		BLUEBONNET RESPONSIBILITY
Deliver essential project documents to Bluebonnet Electric Coop. **- Site plan files (CAD Format), load information, information request form(s), project schedule.**	**BEFORE THE CLOCK STARTS**	Facilitate correspondence with member/developer to discuss needs and review available information.
		Provide Bluebonnet Developer's Package (Commercial/ Residential); including standard Bluebonnet Easement.
		Collect information from Member/Developer.
		Verify a complete member package has been received, including all required documentation.
Host a site visit and/or Pre-design Meeting/Call with Bluebonnet Representative(s). **Provide up to date and accurate Project Schedule for all stages, including desired energization date.**	**WEEK #1**	Attend site visit or Pre-design meeting, evaluate site layout, utility coordination, member construction coordination, jobsite construction access, etc.
****Bluebonnet Electric cannot begin design of project until all required documentation is received.****	**WEEKS #2-#5**	Design electric service layout; coordinate with the electric system (circuit capacity, fuses). Size equipment, determine rate class for Community Representative to communicate to Member.
	WEEKS #6-#7	Prepare and submit any necessary permits. Schedule and complete field staking of project. Finalize and secure all easements.
	WEEK #8	Create cost estimate and deposit and send cost letter and Site Ready Letter to developer.
Expedite payment to Bluebonnet Electric for project. **Provide any required third party easements and outstanding information.**	**WEEK #9**	
****Bluebonnet Electric will not release project for scheduling (apartments and subdivisions) until addressing information is received.****	**WEEKS #10-#11**	Process project payment.
	WEEK #12	Prepare for and release project to construction. Verify material availability and receipt of developer's Site Ready Letter.
****Bluebonnet Electric cannot begin construction of project until Site Ready documentation is received.****	**WEEKS #13-#28**	Upon release, Construction Lead (Contract Coordinator or Bluebonnet Construction) will contact member within two business days to provide anticipated construction start date, duration, planned completion, etc.
Construction crews will leave the site if suitable construction conditions are unsatisfactory.		
Member completes preparation for final electric service delivery.		Request crew scheduling from construction. Complete inspections and accept installations. Verify site is prepared and ready for construction.
		Construct Bluebonnet Electric Facilities.
Member requests initiation of final electric service.	**WEEKS #29-#30**	Inspect final installation. Energize project and initiate electric service.

A. If a Member step is late, the project clock **STOPS**. Members/Developers are highly encouraged to stay on top of payments, required easements, and all crucial deliverables and documentation.
B. Elapsed times are not a guarantee. More than thirty weeks may be needed for larger scope projects or projects that require significant upgrades to Bluebonnet Electric's system infrastructure.
C. Member/Developer is required to provide Bluebonnet Electric with any and all required easements, including third party, prior to commencing construction.
D. Bluebonnet Engineering staff are responsible for all steps from project inception through Week #12. Weeks #13 - #30 are managed by Bluebonnet Construction Staff and are denoted in **BLUE**.
E. Permitting schedule is contingent on regulatory agency approval (response times vary).
F. Member/Developer is required to notify construction once site is ready by returning a signed Site Ready Letter. **Projects will not be released for scheduling until this document has been returned.**

During the **planning, engineering, and design phase** of your project your main point of contact will be one of Bluebonnet's Project Coordinators. If the Project Coordinator for your project is not available, one of the other team members will be glad to assist you.

Shawn Ely
shawn.ely@bluebonnet.coop
Office: (979) 542-8518
Cell: (979) 540-7361

Rodney Gerik
rodney.gerik@bluebonnet.coop
Office: (979) 542-8527
Cell: (979) 540-8814

Clemente Verastegui
clemente.verastegui@bluebonnet.coop
Office: (979) 542-8542
Cell: (512) 578-6393

Scott Iselt
scott.iselt@bluebonnet.coop
Office: (979) 542-8522
Cell: (979) 540-0195

Shane Mathison
shane.mathison@bluebonnet.coop
Office: (979) 542-8540
Cell: (512) 577-6817

Thomas Ellis (Manager)
thomas.ellis@bluebonnet.coop
Office: (979) 542-8545
Cell: (979) 540-6146

Dalton Voight
dalton.voight@bluebonnet.coop
Cell: (512) 629-3771

Jorge Varillas
jorge.varillas@bluebonnet.coop
Office: (512) 764-2838
Cell: (512) 376-8291

Wyatt Rosenauer
wyatt.rosenauer@bluebonnet.coop
Office: (979) 542-8665
Cell: (512) 629-5924

During the **construction, inspection, and metering phase** of your project your main point of contact will be Bluebonnet's Contractor Coordinator OR Assistant Superintendent. Bluebonnet's personnel cover specific areas of the service territory; areas are listed with their contact information.

Joey Tobola (Contractors)
joey.tobola@bluebonnet.coop
Cell: (979) 540-7162

Randall Bownds (Giddings Area)
randall.bownds@bluebonnet.coop
Office: (979) 542-8516
Cell: (979) 540-6418

Chad Lewis (Brenham Area)
chad.lewis@bluebonnet.coop
Office: (979) 277-8558
Cell: (979) 277-4041

Aaron Seeliger (Red Rock Area)
aaron.seeliger@bluebonnet.coop
Office: (512) 764-2788
Cell: (512) 227-2281

Kenneth Roush (Underground – All Areas)
kenneth.roush@bluebonnet.coop
Cell: (512) 468-5088

Tim Mittasch (Underground- All Areas)
tim.mittasch@bluebonnet.coop
Cell: (979) 540-7159

Daniel Fritsche (Bastrop Area)
daniel.fritsche@bluebonnet.coop
Office: (979) 542-8514
Cell: (979) 542-8546

Carl Miller (Underground Inspector)
carl.miller@bluebonnet.coop
Cell: (979) 540-6495

Joe Hernandez (Underground Inspector)
jose.hernandez@bluebonnet.coop
Cell: (720) 670-7299

Jose Villarreal (Underground Inspector)
jose.villarreal@bluebonnet.coop
Cell: (512) 988-1885

Martin Dorantes (Underground Inspector)
martin.dorantes@bluebonnet.coop
Cell: (512) 748-4453

Ditch and Conduit Placement
Road Crossing
Pad Mount Switchgear Easement Requirements
Dimensions and Wiring Single-Phase Transformer
Dimensions and Wiring Single-Phase Sectionalizer
Three-Phase Transformer Pad 45-750 kVA
Three-Phase Transformer Pad 1000-2500 kVA
Dimensions for Three-Phase Sectionalizer 600A
Standard Residential Streetlight
Right-of-Way Clearing Guide
Switchgear Dimensions and Installation
Meter Loop Specifications (Multiple)

Additional Notes

Underground electrical lines in residential developments (including apartment complexes and any commercial service) shall be looped to accommodate the ability to feed from two or more directions so that in the event of an outage the most number of customers can be provided power until the failed line or equipment is restored. Avoid looping back in the same ditch. Never loop back to the same riser pole, sectionalizing cabinet, or switchgear.

Developments with lots greater than 1.5 acre are required to be designed with sectionalizers at the front lot lines within the PUE or BBEC Easement.

To prioritize safety for first responders and Bluebonnet Electric Cooperative, Inc.'s (BBEC) service men, the main electrical disconnect for each electrical service shall be installed in a readily accessible outdoor location no more than 100 feet from the transformation site. BBEC's Engineering Department must approve the electrical disconnect location before a design estimate will be provided.

Fire Pumps
Electric service to fire pumps shall be served through a CT-metered service.

Material Standards:

Underground warning tape must be 6” width, RED in color with BLACK lettering, and read “Caution Buried Electric Underground”. *Normally, this material is only sold in 1000’ rolls.*

DITCH AND CONDUIT PLACEMENT
NON-ROAD CROSSING

DITCH ASSIGNMENT
FRONT VIEW

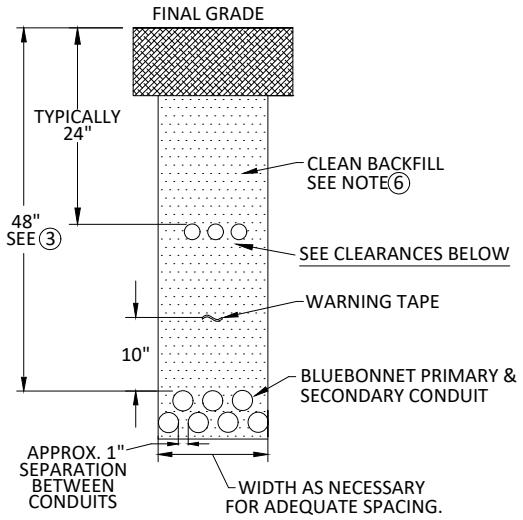

CONDUIT STUB-UP
SIDE VIEW

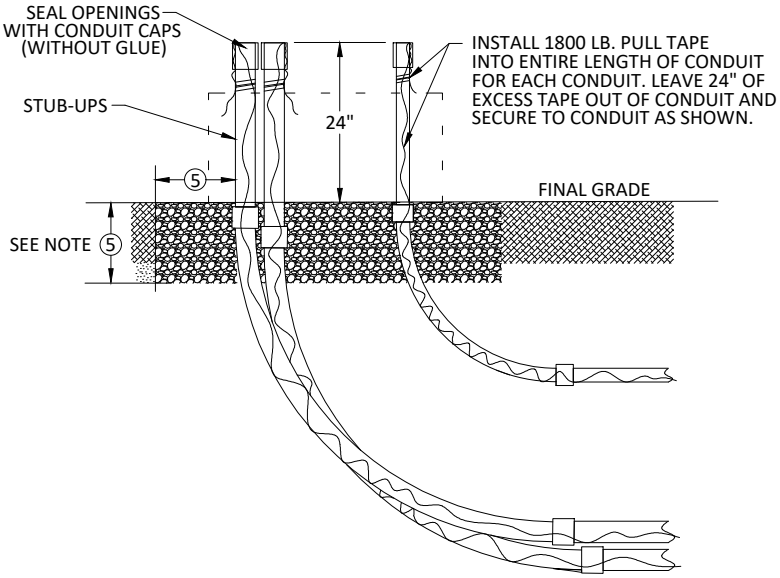

CONDUIT CLEARANCES
FRONT VIEW

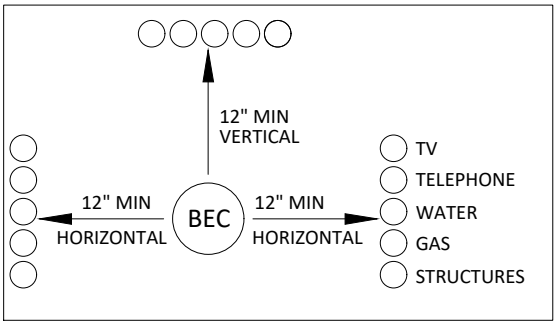

CONDUIT STUB-UP CLEARANCES
TOP VIEW

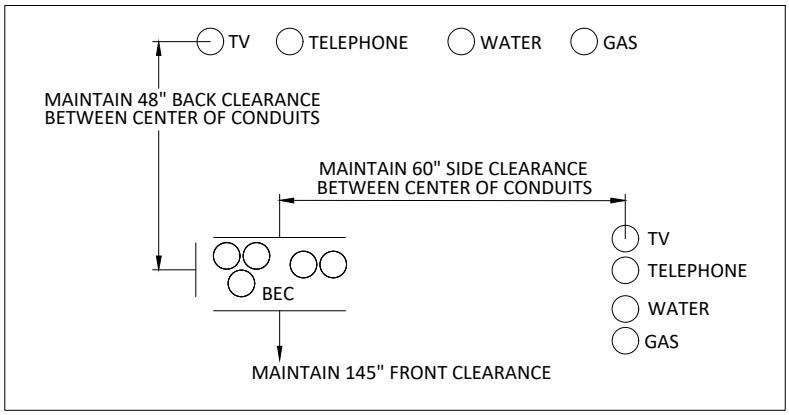

ANY CONDUITS STUBBED OUT FOR FUTURE USE SHALL EXTEND A MINIMUM OF 5' FROM EQUIPMENT. ENDS SHALL BE MARKED WITH 3" DIAMETER GREY PVC CONDUIT, EXTENDING 4' ABOVE GRADE AND PAINTED RED.

NOTES:

1. CONDUIT SHALL BE GREY SCHEDULE 40 PVC. | PRIMARY & SECONDARY= 3" | LIGHTING= 2"
2. CONDUIT ELBOW: PRIMARY & SECONDARY= 90°, 48" SWEEP | STREETLIGHT = 90°, 24" SWEEP
3. NORMAL DITCH COVER DEPTH IS 48". ADJUSTMENTS MAY BE MADE TO 48" DEPTH IF NECESSARY UPON BLUEBONNET APPROVAL.
4. SEPARATION FROM OTHER UTILITIES SHALL BE 12" MINIMUM OR SUFFICIENT TO PREVENT ANY FORESEEN DAMAGE OF EITHER FACILITY TO THE OTHER.
5. GRAVEL FOR PADS SHALL BE 3/8" WASHED PEA GRAVEL. DEPTH AND WIDTH SHALL BE TO EQUIPMENT SPECIFICATION.
6. BACKFILL MATERIAL SHALL BE CLEAN AND FREE FROM ALL ORGANIC MATERIAL, UNSTABLE MATERIALS, DEBRIS, LUMPS, OR BROKEN PAVING. NO ROCKS OR STONES SHALL BE GREATER THAN 1" IN ANY BACKFILL. THE BACKFILL MUST PROVIDE AN EVEN SUPPORT FOR CONDUITS. MATERIAL FOR BACKFILL MAY BE MATERIAL RESULTING FROM EXCAVATION, IF SUITABLE IN THE OPINION OF THE BBEC INSPECTOR OR BBEC PROJECT COORDINATOR.

Bluebonnet	Drawn:	Approved:	Date:	UNDERGROUND DISTRIBUTION	J-3
	CV	Project Coordinators	Oct. 31, 2019		

DITCH AND CONDUIT PLACEMENT
ROAD CROSSING

CONDUIT FRONT VIEW

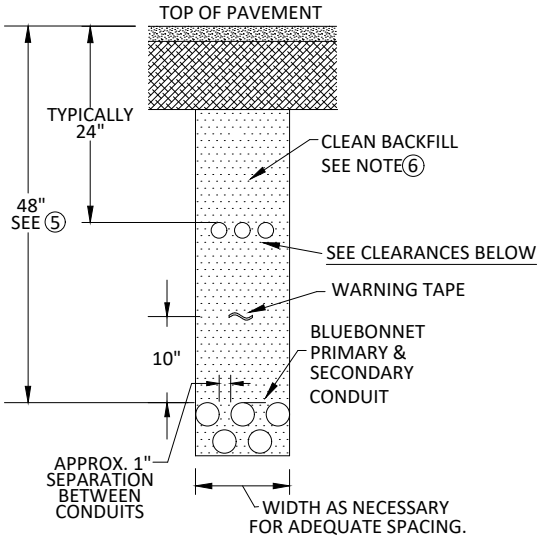

CONDUIT SIDE VIEW

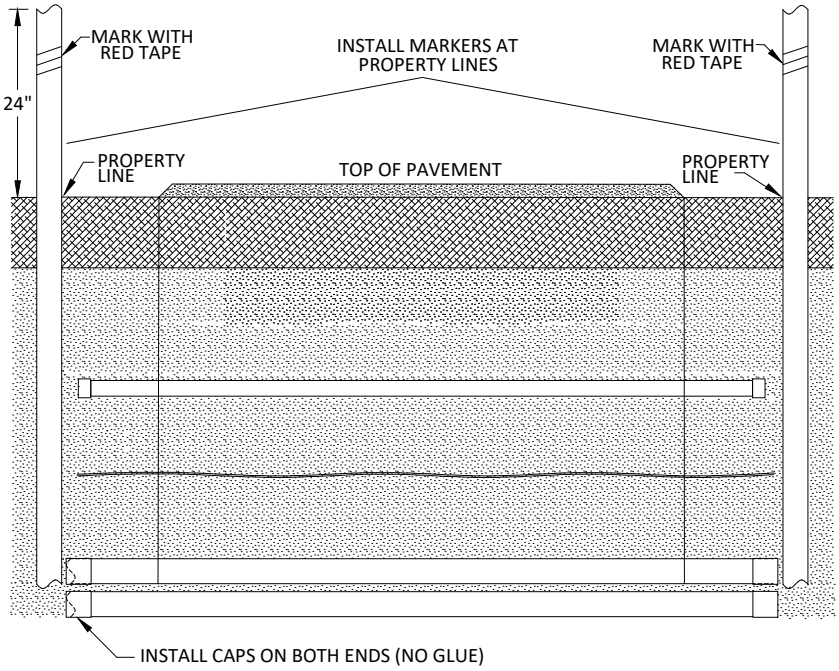

CONDUIT CLEARANCES FRONT VIEW

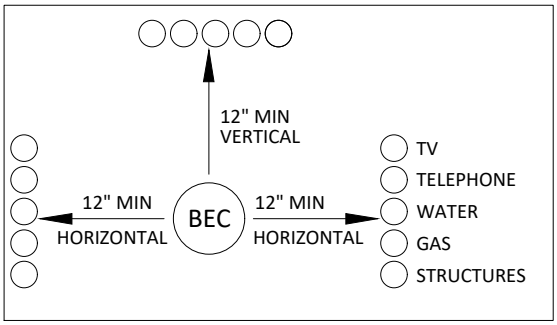

CONDUIT STUB-UP CLEARANCES TOP VIEW

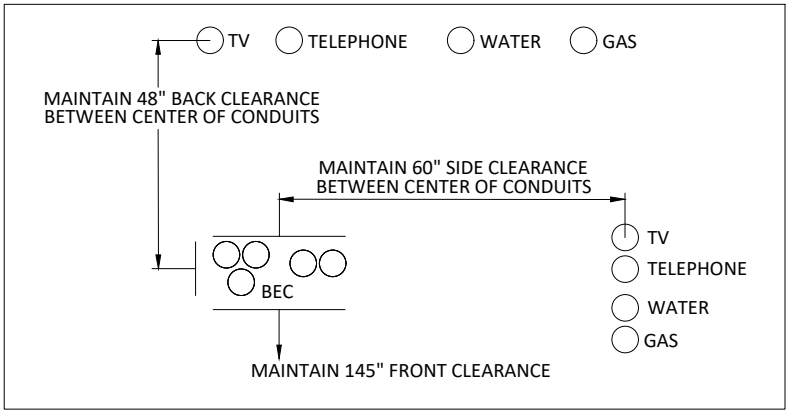

ANY CONDUITS STUBBED OUT FOR FUTURE USE SHALL EXTEND A MINIMUM OF 5' FROM EQUIPMENT. ENDS SHALL BE MARKED WITH 3" DIAMETER GREY PVC CONDUIT, EXTENDING 4' ABOVE GRADE AND PAINTED RED.

NOTES:

1. STATE AND LOCAL CODES MAY REQUIRE DIFFERENT STANDARDS, IN WHICH CASE THE MOST STRINGENT CODE SHALL TAKE PRECEDENCE.
2. CONDUIT SHALL BE MINIMUM GRAY SCHEDULE 40 PVC. | PRIMARY & SECONDARY = 3" | LIGHTING = 2"
3. CONDUIT ELBOW: PRIMARY & SECONDARY = 90°, 48" SWEEP | LIGHTING = 90°, 24" SWEEP
4. LENGTH OF CONDUITS SHALL BE FROM PROPERTY LINE TO PROPERTY LINE.
5. NORMAL COVER DEPTH IS 48". ADJUSTMENTS MAY BE MADE TO 48" DEPTH IF NECESSARY UPON BLUEBONNET APPROVAL.
6. BACKFILL MATERIAL SHALL BE CLEAN AND FREE FROM ALL ORGANIC MATERIAL, UNSTABLE MATERIALS, DEBRIS, LUMPS, OR BROKEN PAVING. NO ROCKS OR STONES SHALL BE GREATER THAN 1" IN ANY BACKFILL. THE BACKFILL MUST PROVIDE AN EVEN SUPPORT FOR CONDUITS. MATERIAL FOR BACKFILL MAY BE MATERIAL RESULTING FROM EXCAVATION, IF SUITABLE IN THE OPINION OF THE BBEC INSPECTOR OR BBEC PROJECT COORDINATOR.

Bluebonnet	Drawn:	Approved:	Date:	UNDERGROUND DISTRIBUTION	J-4
	CV	Project Coordinators	Oct. 31, 2019		

RISER POLE CONDUIT

DITCH ASSIGNMENT
FRONT VIEW

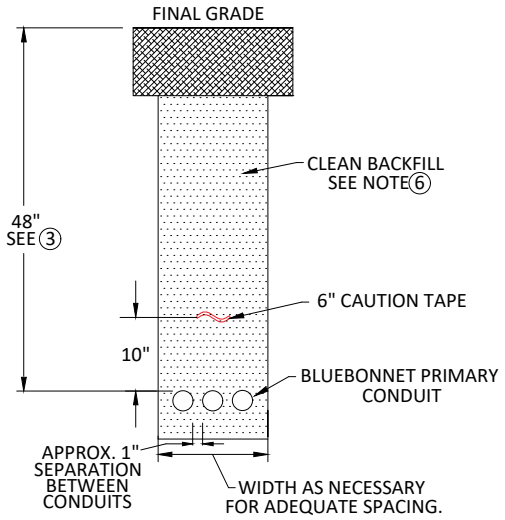

CONDUIT STUB-UP
SIDE VIEW

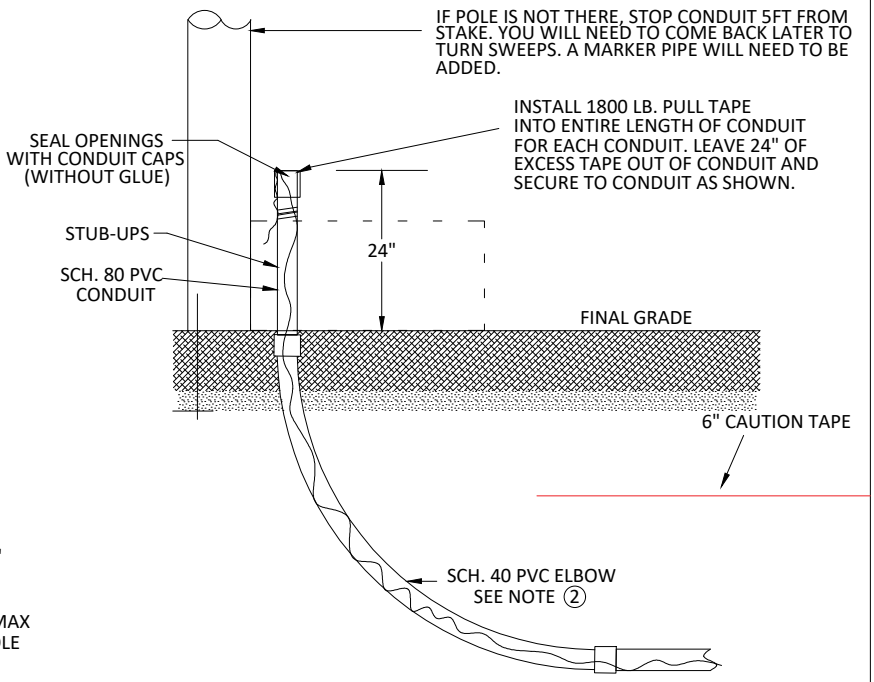

TOP VIEW

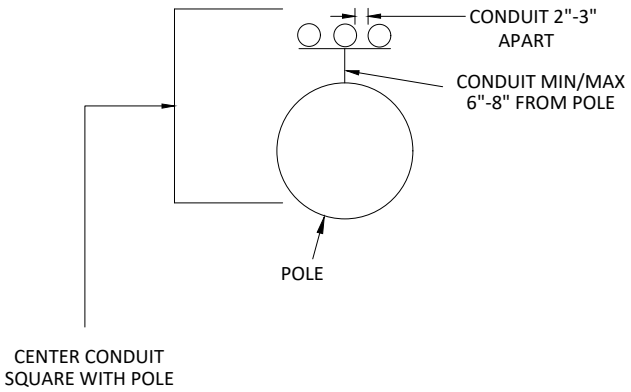

NOTES:

1. CONDUIT BELOW GROUND SHALL BE GREY SCHEDULE 40 PVC. | PRIMARY & SECONDARY= 3" | LIGHTING= 2"
2. CONDUIT ELBOW: PRIMARY & SECONDARY= 90°, 48" SWEEP | STREETLIGHT = 90°, 24" SWEEP
3. NORMAL DITCH COVER DEPTH IS 48". ADJUSTMENTS MAY BE MADE TO 48" DEPTH IF NECESSARY UPON BLUEBONNET APPROVAL.
4. SEPARATION FROM OTHER UTILITIES SHALL BE 12" MINIMUM OR SUFFICIENT TO PREVENT ANY FORESEEN DAMAGE OF EITHER FACILITY TO THE OTHER.
5. BACKFILL MATERIAL SHALL BE CLEAN AND FREE FROM ALL ORGANIC MATERIAL, UNSTABLE MATERIALS, DEBRIS, LUMPS, OR BROKEN PAVING. NO ROCKS OR STONES SHALL BE GREATER THAN 1" IN ANY BACKFILL. THE BACKFILL MUST PROVIDE AN EVEN SUPPORT FOR CONDUITS. MATERIAL FOR BACKFILL MAY BE MATERIAL RESULTING FROM EXCAVATION, IF SUITABLE IN THE OPINION OF THE BBEC INSPECTOR OR BBEC PROJECT COORDINATOR.
6. CONDUIT ABOVE GROUND SHALL BE GREY SCHEDULE 80 PVC.
7. FIRST BRACKET WILL BE INSTALLED 24'' FROM FINAL GRADE.
8. ROTATE CONDUIT TO AVOID CONFLICT WITH COMMUNICATION ATTACHMENTS.

Bluebonnet	Drawn:	Approved:	Date:	UNDERGROUND DISTRIBUTION	J-6
	JW	Standards	Mar. 26, 2024		

BLUEBONNET ELECTRIC COOPERATIVE REQUIREMENTS FOR SWITCHING EQUIPMENT PLACEMENT

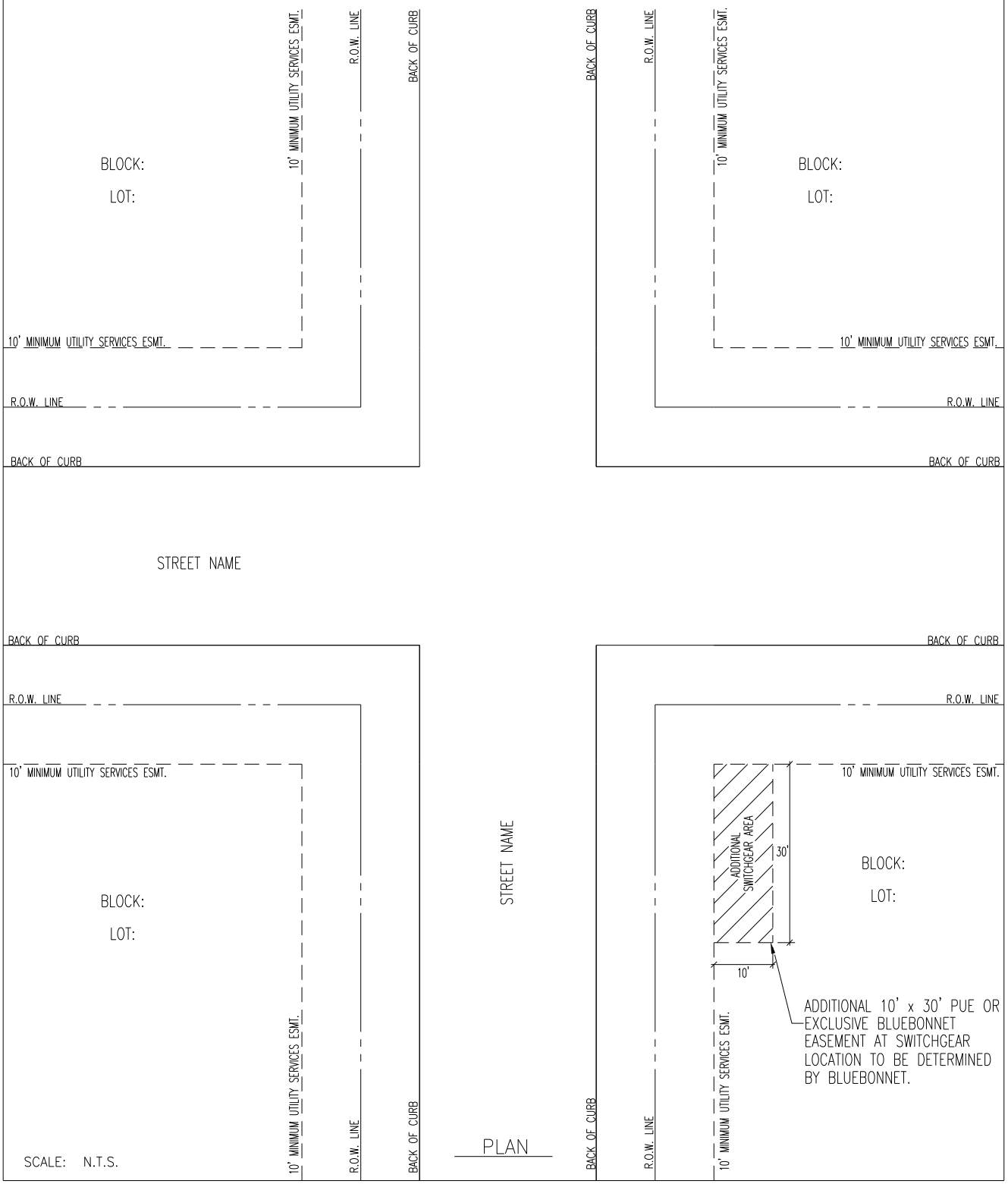

1PH PADMOUNT TRANSFORMER DIMENSIONS AND WIRING

TOP VIEW

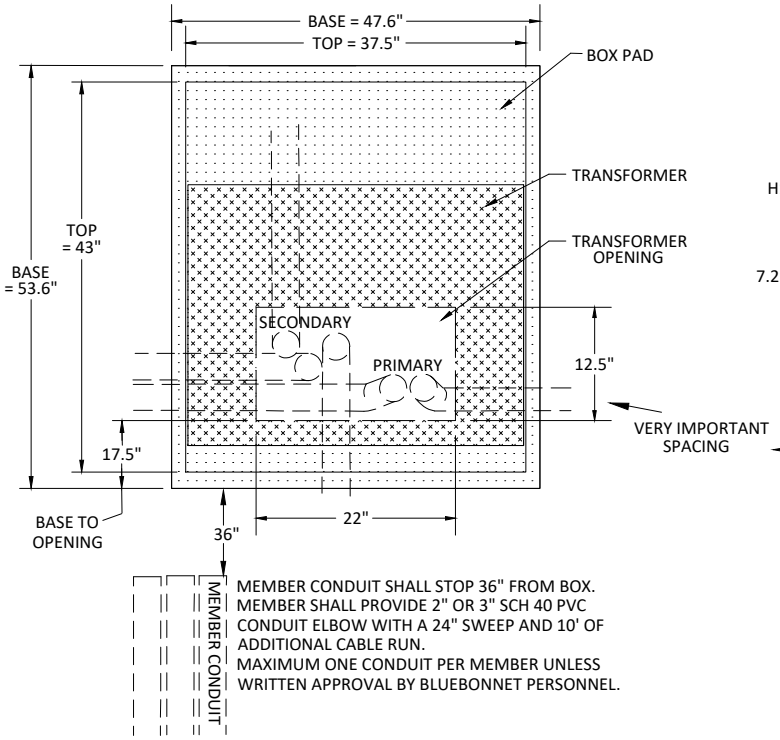

MEMBER CONDUIT SHALL STOP 36" FROM BOX.
MEMBER SHALL PROVIDE 2" OR 3" SCH 40 PVC CONDUIT ELBOW WITH A 24" SWEEP AND 10' OF ADDITIONAL CABLE RUN.
MAXIMUM ONE CONDUIT PER MEMBER UNLESS WRITTEN APPROVAL BY BLUEBONNET PERSONNEL.

WIRING DIAGRAM

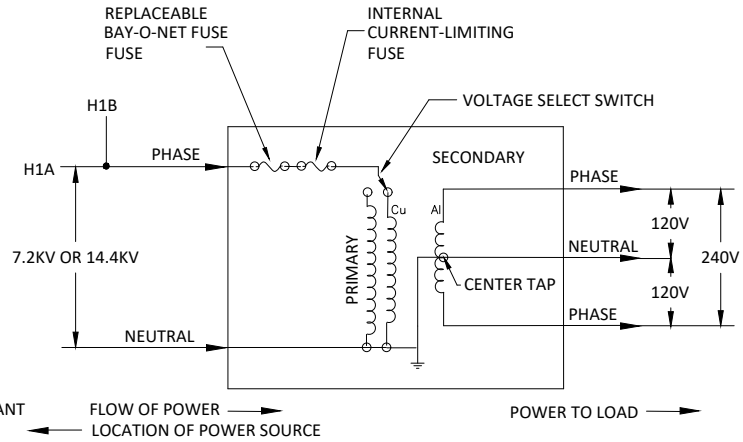

Ⓐ CLEARANCE BETWEEN WALLS AND TRANSFORMER:
NON-COMBUSTIBLE - 3 FT.
COMBUSTIBLE: UP TO 75 kVA - 10 FT.
GREATER THAN 75 kVA - 20 FT.

FRONT VIEW

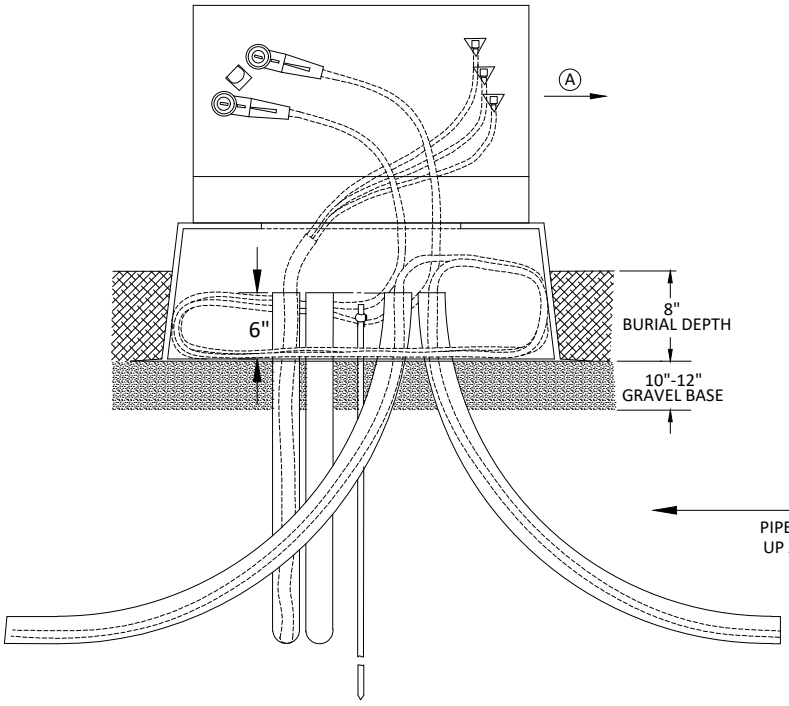

SIDE VIEW

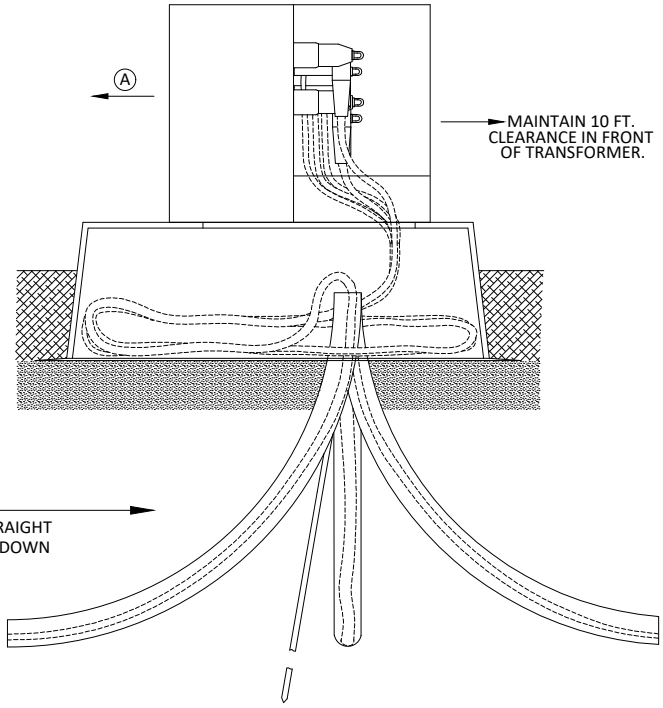

PIPES STRAIGHT UP AND DOWN

Bluebonnet	DATE APPROVED: SEPTEMBER 8, 2016	UNDERGROUND DISTRIBUTION	A-2

1PH PADMOUNT SECTIONALIZER DIMENSIONS AND WIRING

TOP VIEW

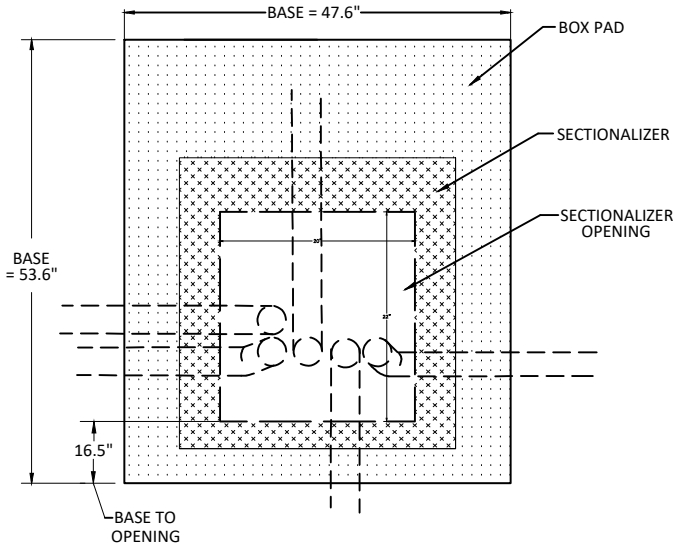

FRONT VIEW

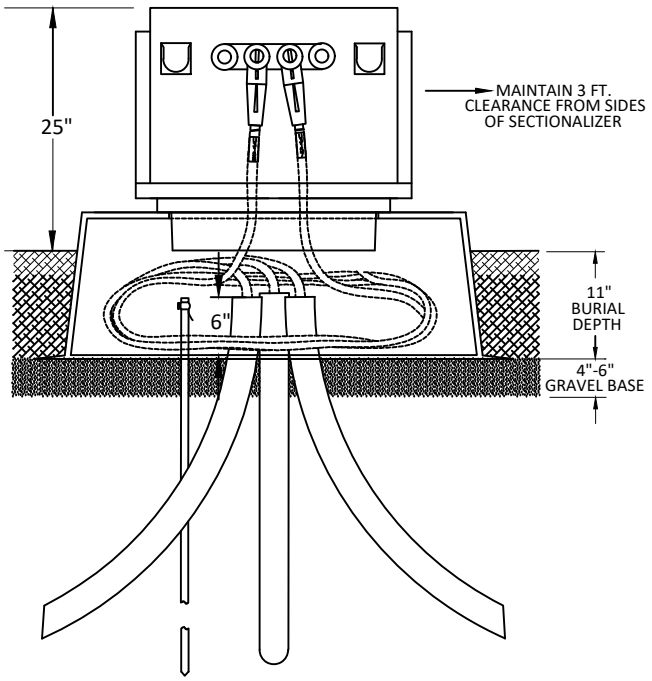

SIDE VIEW

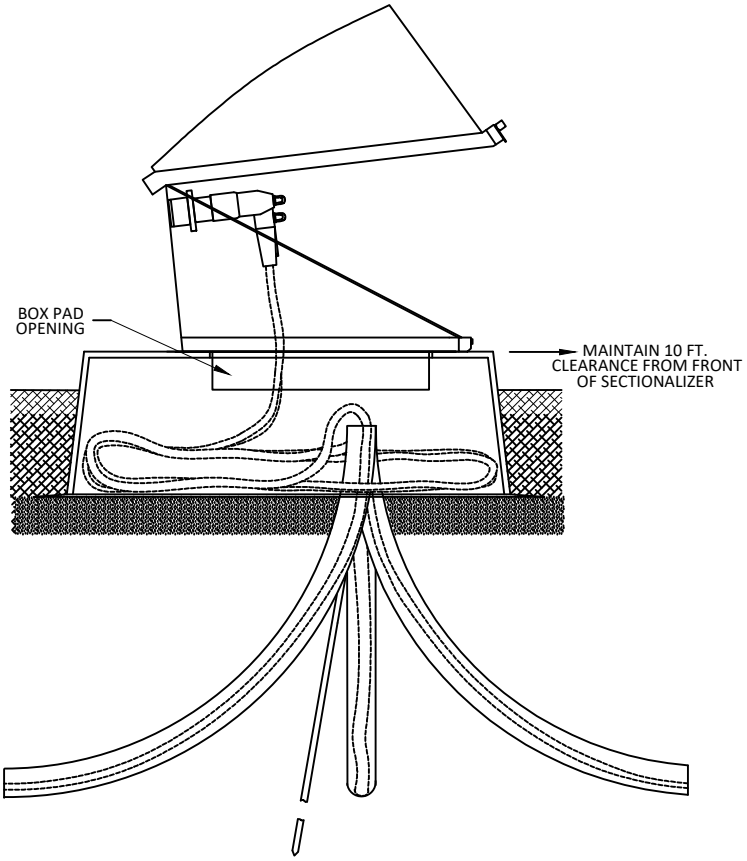

Bluebonnet	DATE APPROVED: SEPTEMBER 8, 2016	UNDERGROUND DISTRIBUTION	C-2

3PH TRANSFORMER PAD
45 - 750 KVA (UM3-A)

TOP VIEW

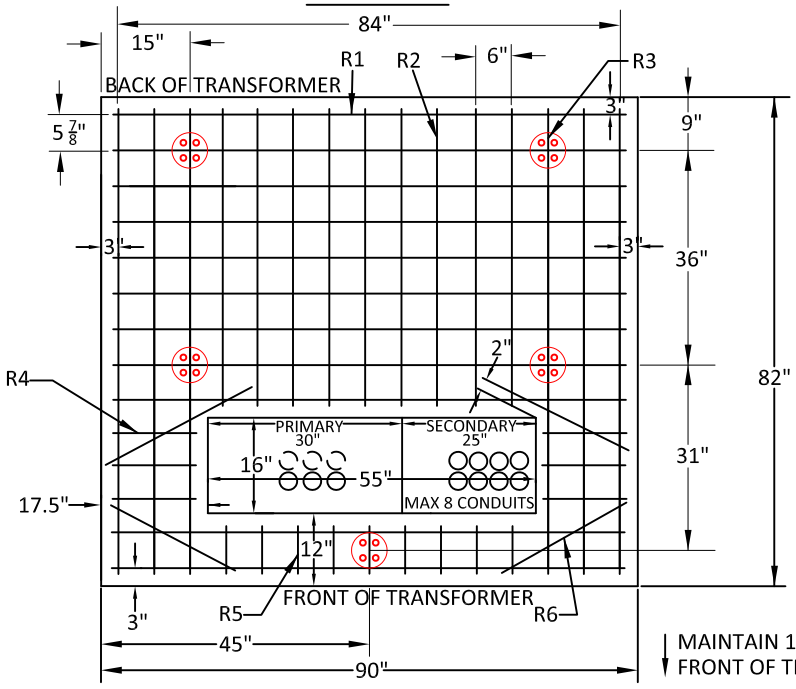

MAINTAIN 10' CLEARANCE IN FRONT OF TRANSFORMER DOORS

MAINTAIN CLEARANCE FROM TRANSFORMER SIDES:
OTHER TRANSFORMERS - 5 FT.
NON-COMBUSTIBLE WALLS - 5 FT.
COMBUSTIBLE WALLS:
0 TO 75 KVA - 10 FT.
>75 KVA - 20 FT.

REINFORCING BARS; 1/2"					
R1	R2	R3	R4	R5	R6
11 X 86"	9 X 50"	6 X 78"	6 X 14"	9 X 8"	4 X 25"

SEE NOTE #3

FRONT VIEW

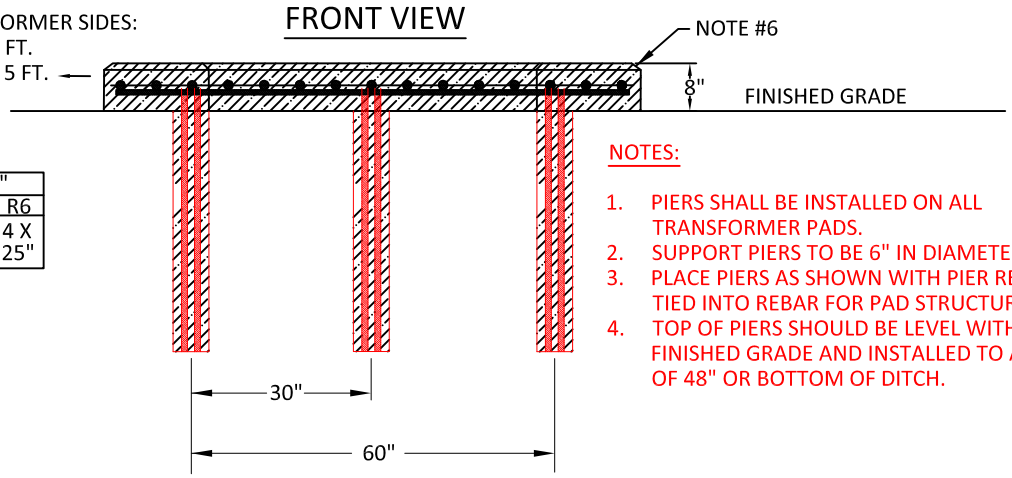

NOTES:

1. PIERS SHALL BE INSTALLED ON ALL TRANSFORMER PADS.
2. SUPPORT PIERS TO BE 6" IN DIAMETER.
3. PLACE PIERS AS SHOWN WITH PIER REBAR TIED INTO REBAR FOR PAD STRUCTURE.
4. TOP OF PIERS SHOULD BE LEVEL WITH FINISHED GRADE AND INSTALLED TO A DEPTH OF 48" OR BOTTOM OF DITCH.

ANY CONDUITS STUBBED OUT FOR FUTURE USE SHALL EXTEND A MINIMUM OF 5' FROM EQUIPMENT. ENDS SHALL BE MARKED WITH 3" DIAMETER GREY PVC CONDUIT, EXTENDING 4' ABOVE GRADE AND PAINTED RED.

NOTES:

1. TAMP GROUND UNDER PAD BEFORE SETTING TO PREVENT UNEVEN SETTLING.
2. CONCRETE: 3000 POUNDS MIN. PER SQUARE INCH; 4% TO 6% ENTRAINED AIR, 3/4" MAX. SIZE AGGREGATE.
3. REINFORCING STEEL: ATSM-A615 GRADE 60; EVENLY SPACE APPROXIMATELY 6" O.C. EACH WAY AND SECURELY TIED TOGETHER.
4. MINIMUM 2 INCH CONCRETE COVER OVER REINFORCING STEEL.
5. WOOD FLOAT LEVEL FINISH LEAVING NO DEPRESSIONS.
6. 3/4" CHAMFER ALL EDGES.
7. PRIMARY AND SECONDARY CONDUIT SHALL BE INSTALLED AND SEALED BEFORE POURING PAD.
8. IF FUTURE EXPANSION TO A TRANSFORMER LARGER THAN 750 KVA IS POSSIBLE, BLUEBONNET MAY REQUEST THE CONSTRUCTION OF THE PAD ON PAGE B-6.
9. **MAXIMUM OF 8 CONDUITS, 4" SCHEDULE 40 PVC PIPES ARE ALLOWED IN THE SECONDARY COMPARTMENT.**
10. STUB THE SECONDARY PIPES AS CLOSE TO THE EDGE SECONDARY CUTOUT AS POSSIBLE. (SEE DRAWING)
11. MAXIMUM OF 6 CONDUITS, 3" SCHEDULE 40 PVC PIPES ARE ALLOWED IN THE PRIMARY COMPARTMENT.

Bluebonnet	Drawn:	Approved:	Date:	UNDERGROUND DISTRIBUTION	B-5
	SF	Coordinators	Nov. 12, 2019		

3PH TRANSFORMER PAD
1000 - 2500 KVA (UM3-B)

TOP VIEW

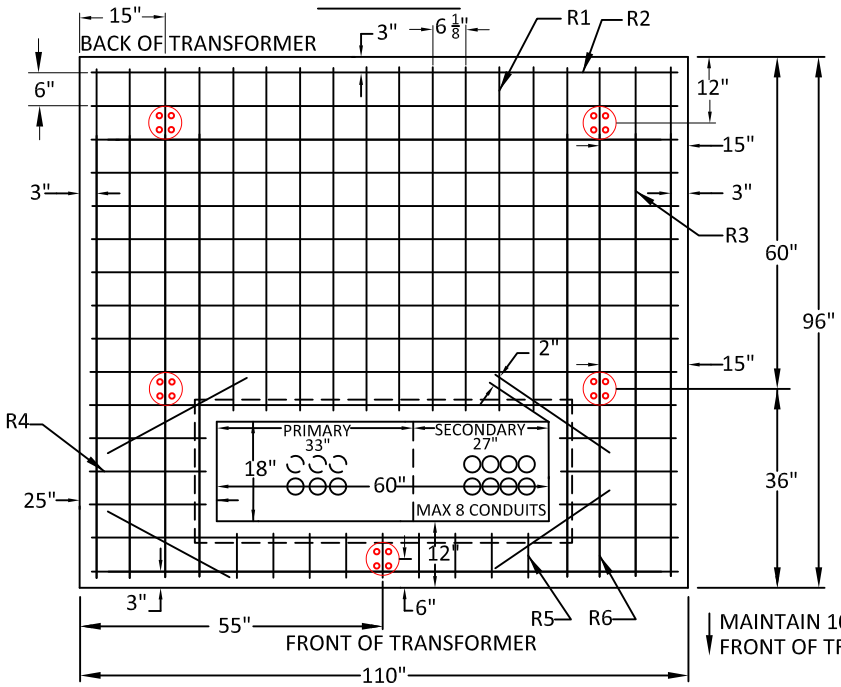

NOTES:

1. PIERS SHALL BE INSTALLED ON ALL TRANSFORMER PADS.
2. SUPPORT PIERS TO BE 6" IN DIAMETER.
3. PLACE PIERS AS SHOWN WITH PIER REBAR TIED INTO REBAR FOR PAD STRUCTURE.
4. TOP OF PIERS SHOULD BE LEVEL WITH FINISHED GRADE AND INSTALLED TO A DEPTH OF 48" OR BOTTOM OF DITCH.

REINFORCING BARS; 1/2"					
R1	R2	R3	R4	R5	R6
10 X 62"	13 X 106"	8 X 92"	6 X 21"	9 X 8"	4 X 25"

SEE NOTE #3

FRONT VIEW

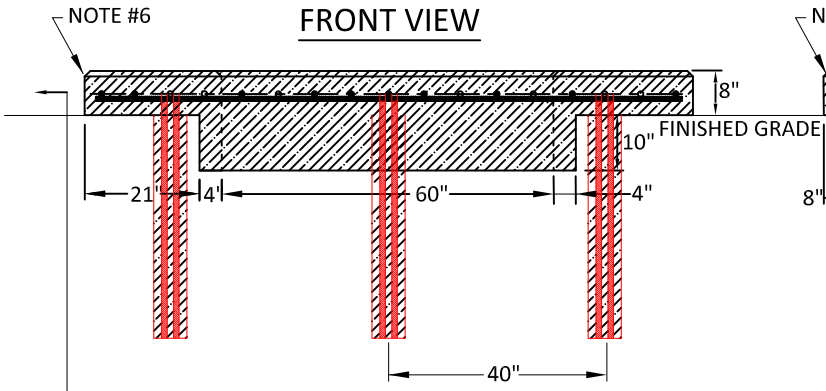

SIDE VIEW

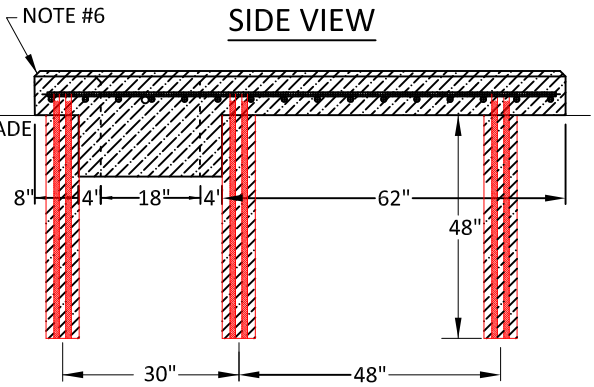

MAINTAIN CLEARANCE FROM TRANSFORMER SIDES:
OTHER TRANSFORMERS - 5 FT.
NON-COMBUSTIBLE WALLS - 5 FT.
COMBUSTIBLE WALLS:
0 TO 75 KVA - 10 FT.
>75 KVA - 20 FT.

NOTES:

1. TAMP GROUND UNDER PAD BEFORE SETTING TO PREVENT UNEVEN SETTLING.
2. CONCRETE: 3000 POUNDS MIN. PER SQUARE INCH; 4% TO 6% ENTRAINED AIR, 3/4" MAX. SIZE AGGREGATE.
3. REINFORCING STEEL: ATSM-A615 GRADE 60; EVENLY SPACE APPROXIMATELY 6" O.C. EACH WAY AND SECURELY TIED TOGETHER.
4. MINIMUM 2 INCH CONCRETE COVER OVER REINFORCING STEEL.
5. WOOD FLOAT LEVEL FINISH LEAVING NO DEPRESSIONS.
6. 3/4" CHAMFER ALL EDGES.
7. PRIMARY AND SECONDARY CONDUIT SHALL BE INSTALLED AND SEALED BEFORE POURING PAD.
8. MAXIMUM OF 8 CONDUITS, 4" SCHEDULE 40 PVC PIPES ARE ALLOWED IN THE SECONDARY COMPARTMENT.
9. STUB THE SECONDARY PIPES AS CLOSE TO THE EDGE SECONDARY CUTOUT AS POSSIBLE. (SEE DRAWING)
10. MAXIMUM OF 6 CONDUITS, 3" SCHEDULE 40 PVC PIPES ARE ALLOWED IN THE PRIMARY COMPARTMENT.

Bluebonnet	Drawn:	Approved:	Date:	UNDERGROUND DISTRIBUTION	B-6
	SF	Coordinators	Nov. 12, 2019		

3PH 600A SECTIONALIZER - DIMENSIONS

TOP VIEW

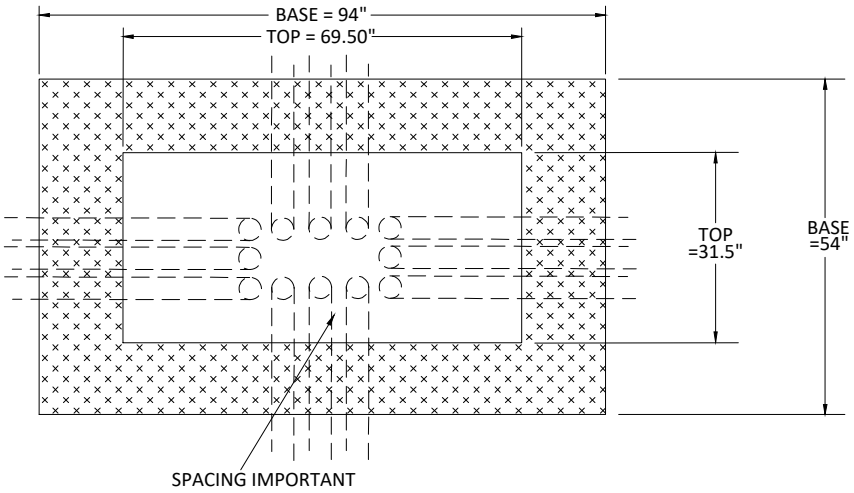

FRONT VIEW

SIDE VIEW

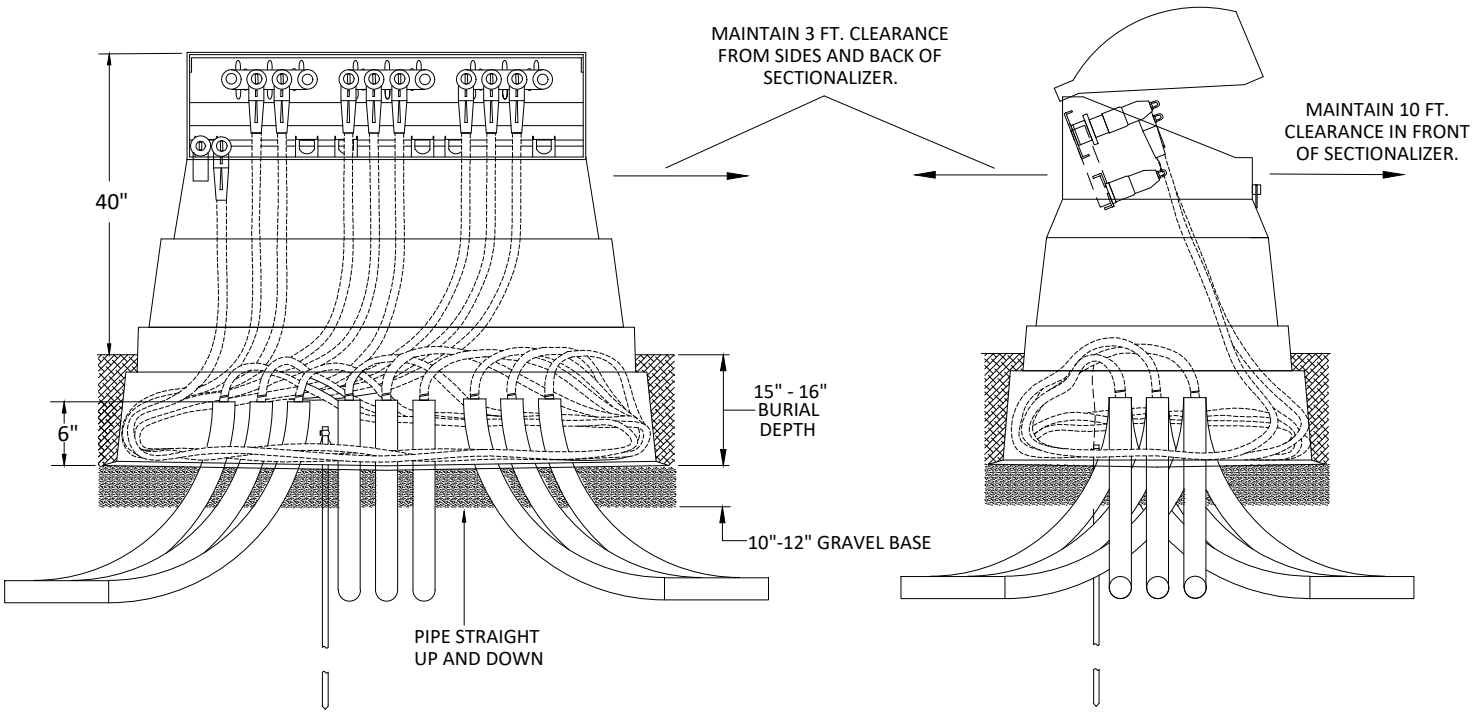

ANY CONDUITS STUBBED OUT FOR FUTURE USE SHALL EXTEND A MINIMUM OF 5' FROM EQUIPMENT. ENDS SHALL BE MARKED WITH 3" DIAMETER GREY PVC CONDUIT, EXTENDING 4' ABOVE GRADE AND PAINTED RED.

Bluebonnet	DATE APPROVED: SEPTEMBER 8, 2016	UNDERGROUND DISTRIBUTION	D-2B

3PH SECTIONALIZER - 900A - DIMENSIONS

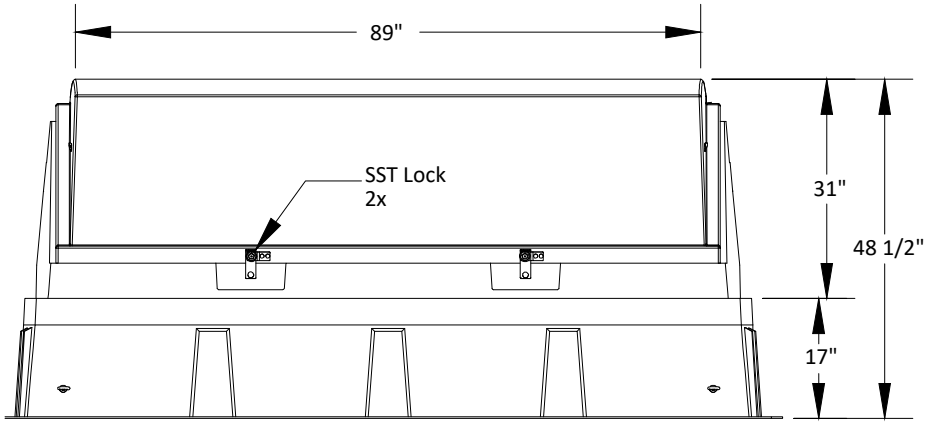

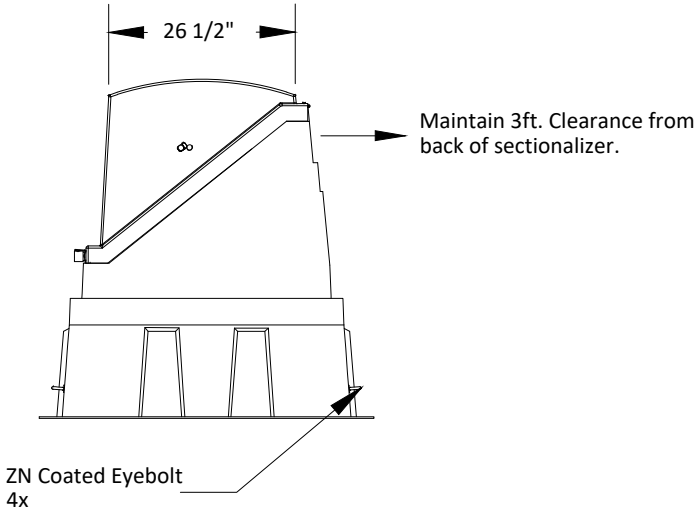

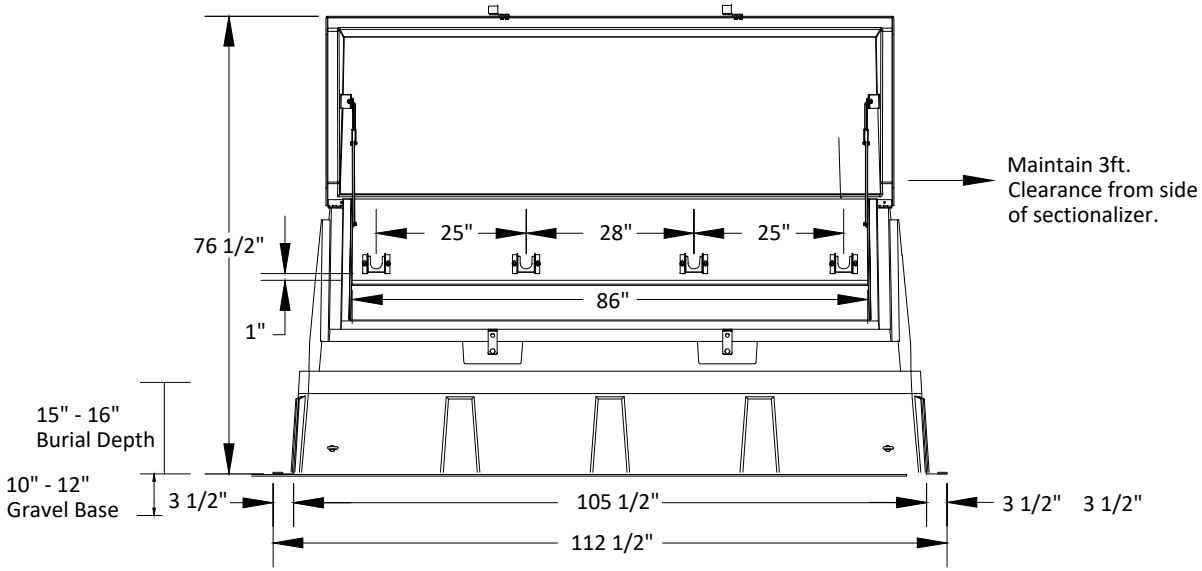

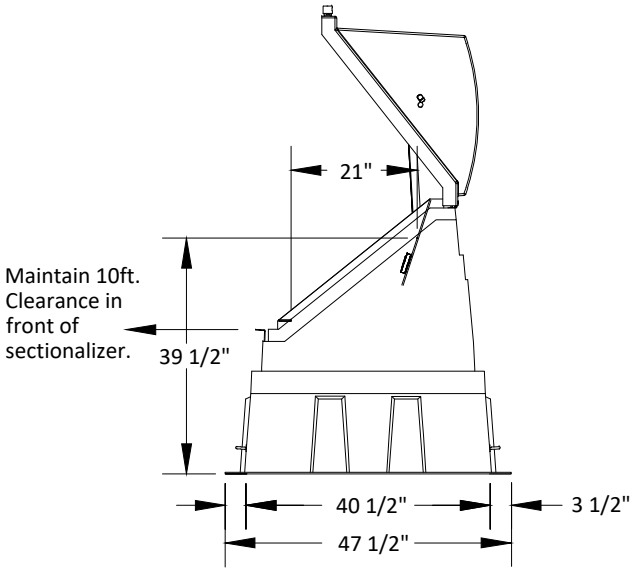

Bluebonnet	Drawn:	Approved:	Date:	UNDERGROUND DISTRIBUTION	D-10
	JW	Standards	June 18,2023		

SECONDARY JUNCTION BOX
CONSTRUCTION STANDARD

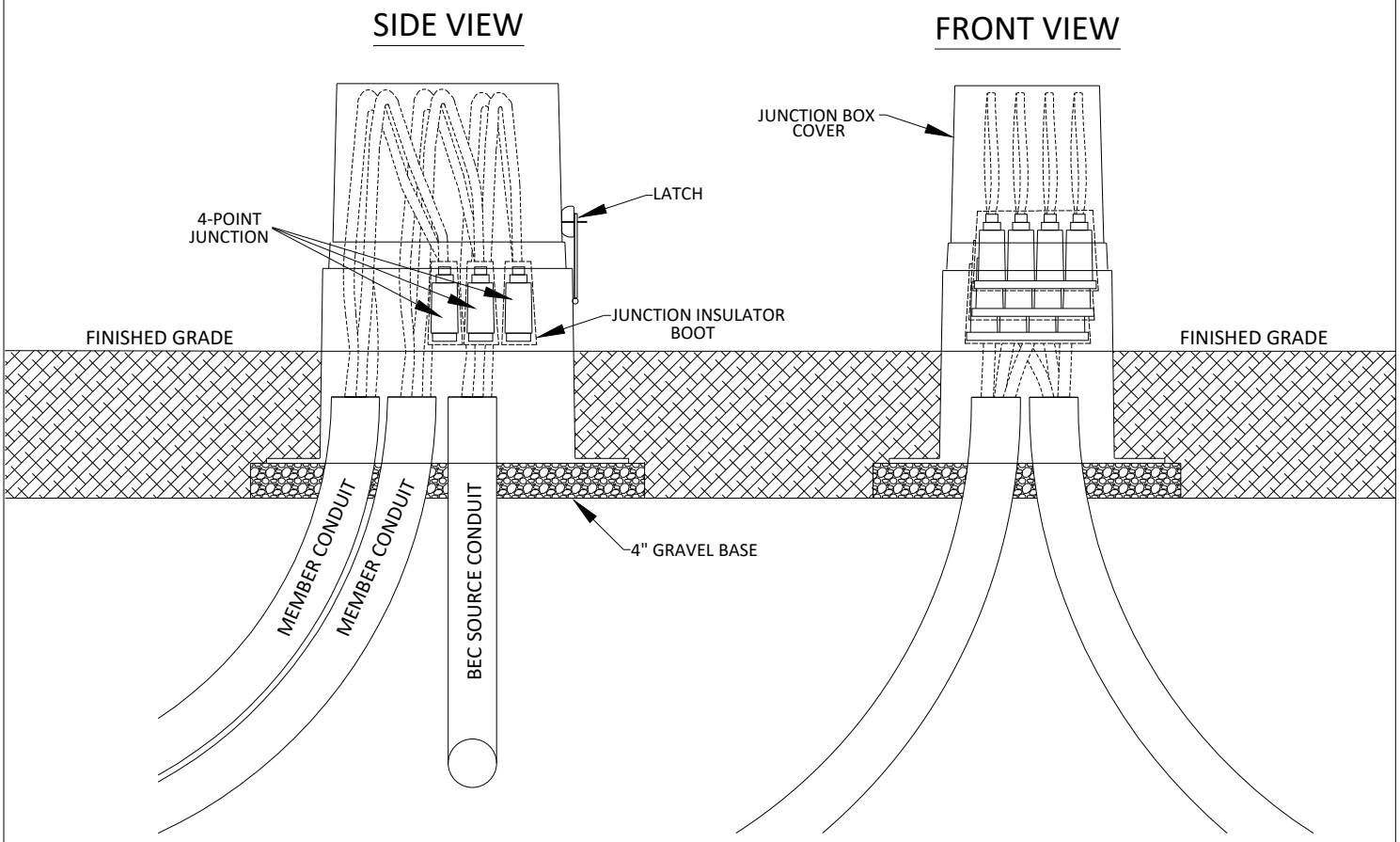

NOTES:

1. A MAXIMUM OF 1 INPUT AND 3 TRIPLEX OUTPUTS AND CAN BE CONNECTED IN JUNCTION BOX.
   MAX CABLE SIZE CONNECTOR ACCOMMODATES 350 KCM.
2. INSTALL INSULATED PROTECTIVE BOOT ON ALL SECONDARY JUNCTIONS.
3. EVENLY DISPERSE 4OZ. OF INSECTICIDE GRANULES IN PAD OPENING.

UJB SECONDARY JUNCTION BOX	INSECTICIDE GRANULES
UJ1-4A OR UJ1-4B 4PT SECONDARY JUNCTION BOX - QTY 3	U3P90-48 PVC ELBOW
GRAVEL	ID TAGS, COLORED TAPE, LABELS

Bluebonnet	DATE APPROVED: AUGUST 15, 2015	UNDERGROUND DISTRIBUTION	E-1

SECONDARY JUNCTION BOX DIMENSIONS

TOP VIEW

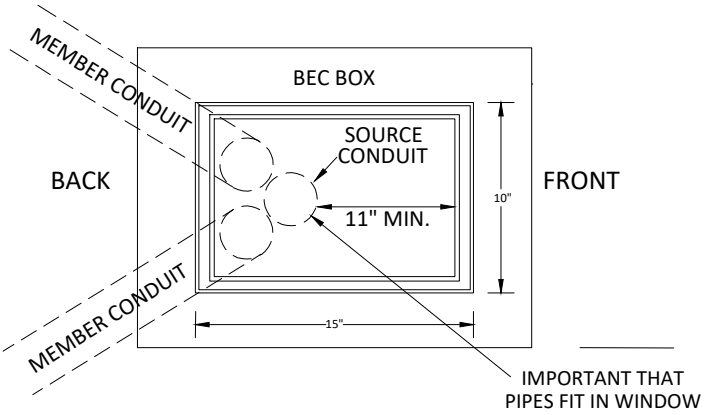

MEMBER SHALL PROVIDE 2" OR 3" SCH 40 PVC CONDUIT ELBOW WITH 10' OF ADDITIONAL CABLE RUN.

MAX ONE CONDUIT PER MEMBER UNLESS WRITTEN APPROVAL BY BEC PERSONNEL.

SIDE VIEW

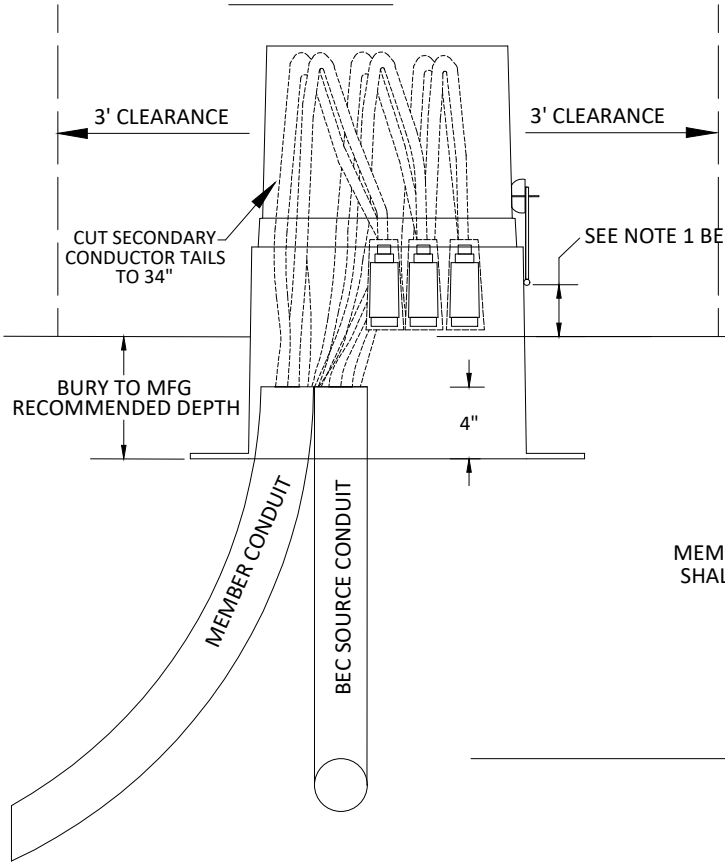

FRONT VIEW

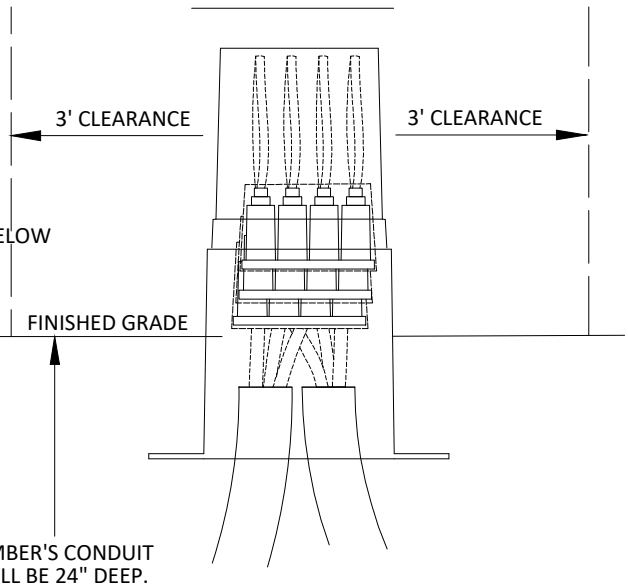

NOTES:

1. LATCH AND LOCK SHALL REMAIN ABOVE GROUND LEVEL.
2. MAINTAIN 3FT CLEARANCE FROM ALL SIDES OF JUNCTION BOX.

Bluebonnet	DATE APPROVED: SEPTEMBER 22 , 2015	UNDERGROUND DISTRIBUTION	E-2

STANDARD RESIDENTIAL STREETLIGHT
MAST, ARM, AND HEAD

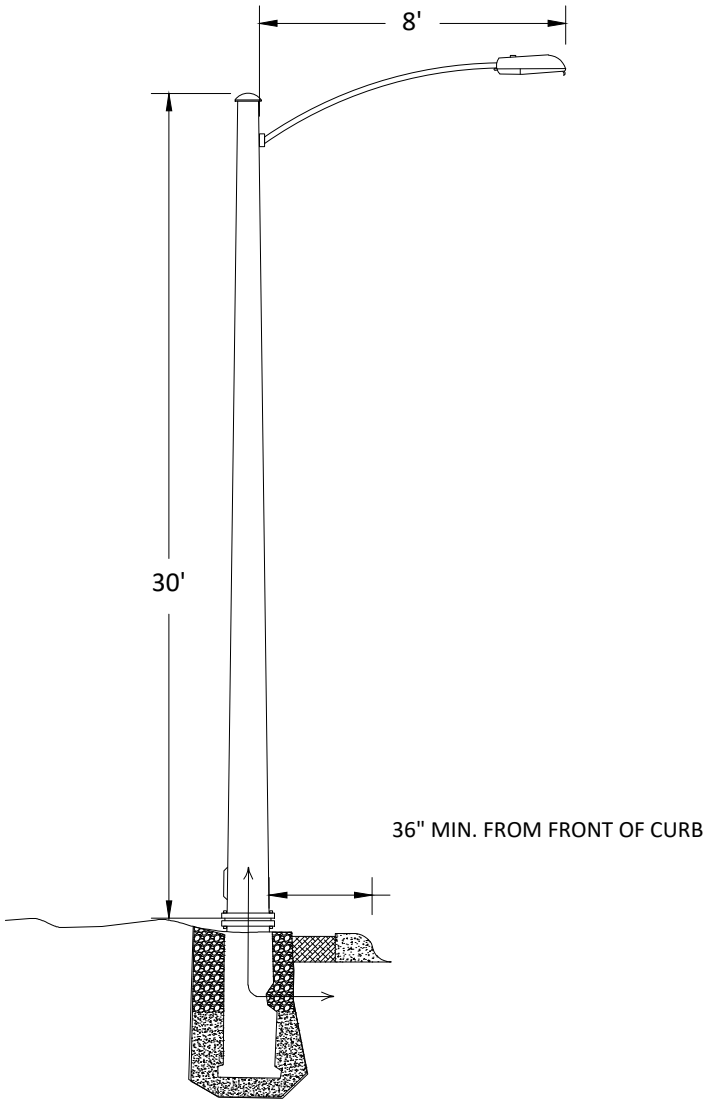

NOTES:

1. COBRAHEAD FIXTURE, LED PHOTOCELL CONTROLLED.
2. IN THE ABSENCE OF A RAISED CURB, BLUEBONNET WILL DETERMINE THE LOCATION OF STREETLIGHT POLES BASED ON APPLICABLE ZONE CRITERIA
3. STREETLIGHT BASE PROVIDED AND INSTALLED BY BEC PERSONNEL. IF DEVELOPER CHOOSES TO PROVIDE/INSTALL, BASE MUST MATCH CATALOG NUMBER FOUND ON UM1-SP
4. BASE CALLED SEPARATELY (UM1-SP)

STOCK:	QTY:	MATERIAL:	
10202	40	CABLE, #14/2 W/GROUND	SL53-8S
14842	1	POLE, ALUMINUM 30 FT. STREET LIGHT W/ 8 FT. ARM	
15580	1	LUMINAIRE, 53 WATT LED W/ PHOTOCELL (USED ON SL53-8S ONLY)	SL94-8S
15970	1	LED, STREETLIGHT MULTI VOLT 200/250W EQUIVALENT (USED ON SL94-8S ONLY)	
15971	1	LED, STREETLIGHT MULTI VOLT 4/400W EQUIVALENT (USED ON SL140-8S ONLY)	SL140-8S
10311	1	CONN, GROUND TRANS #8- 2/0	

Bluebonnet	Drawn:	Approved:	Date:	UNDERGROUND DISTRIBUTION
	JCB	TE	Nov. 10, 2020	

STANDARD RESIDENTIAL STREETLIGHT BASE UM1-SP

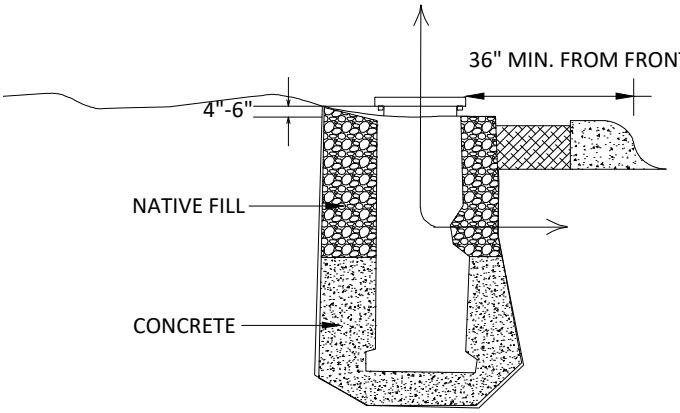

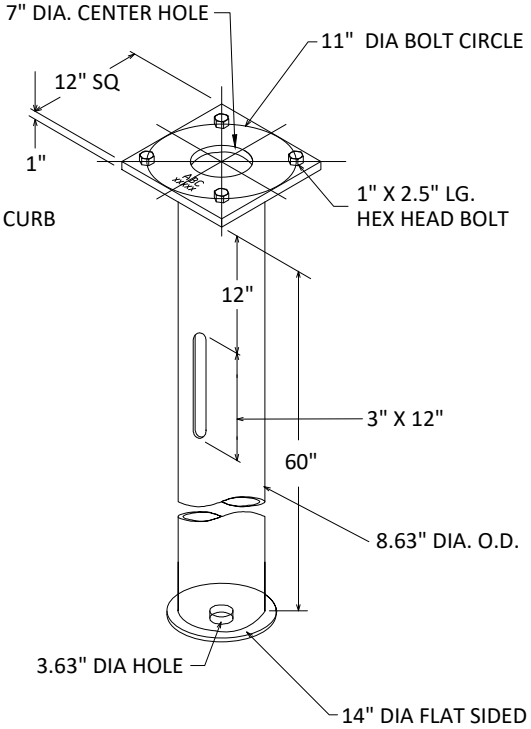

NOTES:
1. COMMERCIAL, 80LBS, SACK CONCRETE
2. SLIT SACK ON SIDE AWAY FROM POLE, SACK TO BE LAID ON LONG SIDE IN POLE HOLE
3. BASE SHOULD BE INSTALLED 4 TO 6 INCHES ABOVE GRADE.
4. HUBBELL POWER SYSTEMS CATALOG NUMBER T112-0212 (CAN BE PURCHASED FROM TECHLINE)
5. IF ORDERED CONCRETE, MIX TO BE 3000 PSI, MINIMUM
6. FLAT SIDE OF BASE TO BE PARALLEL TO BACK OF CURB
7. CONCRETE TO BE POURED UP TO BOTTOM OF KEYHOLE IN BASE. REMAINDER OF HOLE TO BE BACKFILLED WITH NATIVE FILL

STOCK:	QTY:	MATERIAL:
10566	1	FOUNDATION, STEEL STREET LIGHT POLE (CALL SEPARATELY)
10248	6	CEMENT READY MIX 80LBS SACK

Bluebonnet	Drawn:	Approved:	Date:	UNDERGROUND DISTRIBUTION
	SEF	TE	Nov. 10, 2020	

USGE-9 SWITCHGEAR
CONSTRUCTION STANDARD

SOURCE

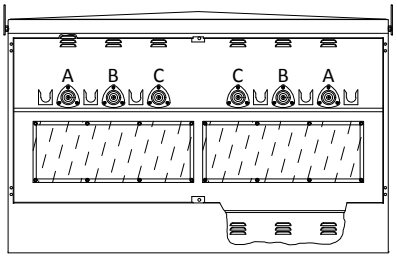

TAP

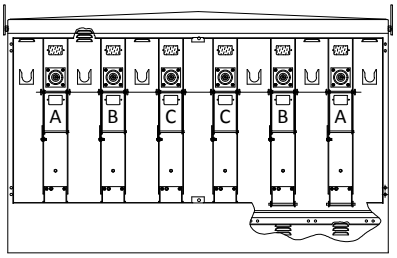

FRONT VIEW

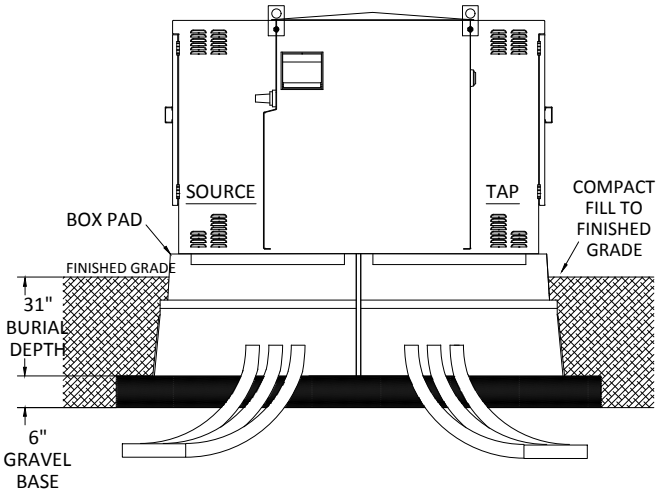

TOP VIEW

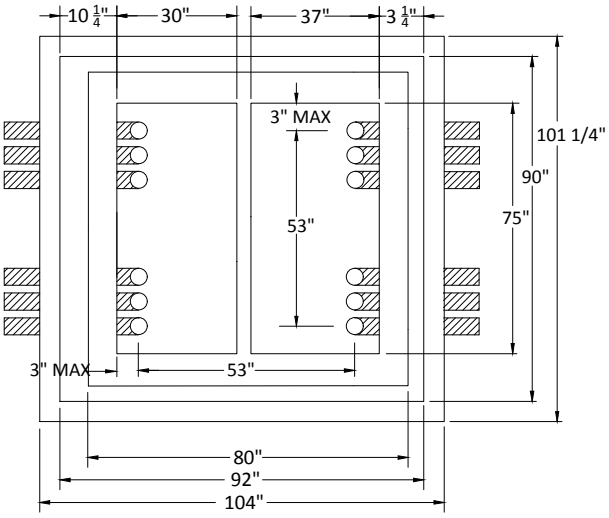

BEC STK#:	QTY:	MATERIAL USGE-9:
13119	1	SWITCHGEAR, AIR, 2-200 FUSE, 2-600 SWITCHES
10988	2	ROD, GROUND 5/8" X 8', 13 MIL CU CLAD
10262	2	CLAMP, GRD ROD GALV 3/4 L
10333	13	CONN, SPLIT BOLT CC #2 L
11196	6.148 lbs	WIRE, COPPER BARE S.D. #2 7 STR L
10732	4	INSECTICIDE ANT CONTROL L
10779	6	LOCK, PADLOCK, STANDARD WITH BEC LOGO
10386	6	CONN,INSUL.L.B.PARKING STAND L
10237	6	CAPS, ASSY GRD TERMINATION L
11202	26.12 lbs	WIRE, COPPER BARE 4/0 19 STR L
10172	6	BUSHING, LB INSERT 25KV L
14300	6	FITTING, FUSE END, SM-20, 15/25 KV L

Bluebonnet	DATE APPROVED: MARCH 8, 2017	UNDERGROUND DISTRIBUTION

USGE-10 SWITCHGEAR
CONSTRUCTION STANDARD

SOURCE

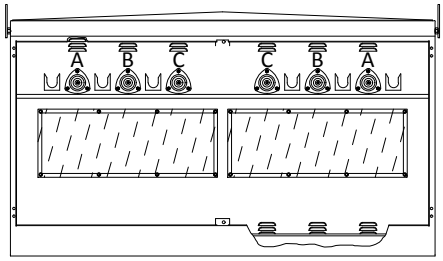

TAP

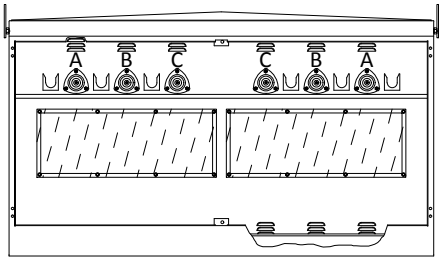

FRONT

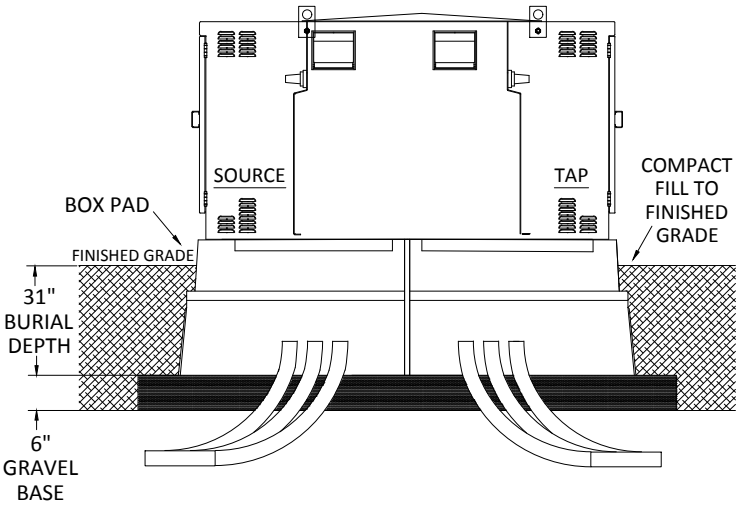

TOP VIEW

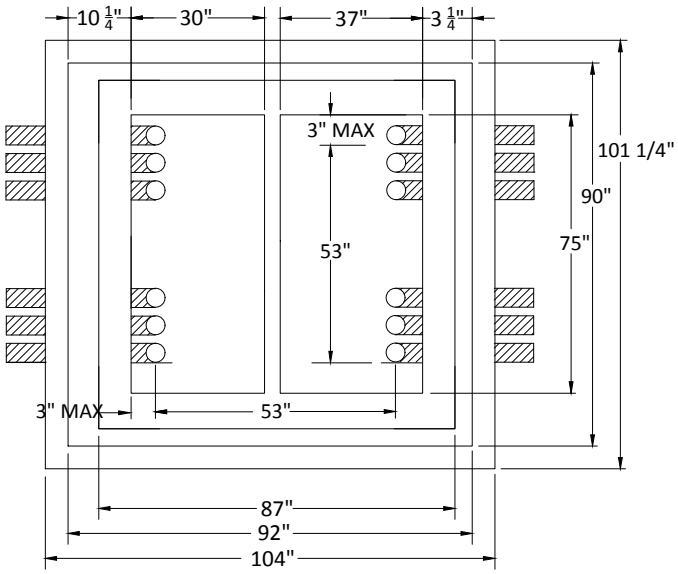

BEC STK#:	QTY:	MATERIAL USGE-10:
13130	1	SWITCHGEAR, AIR, PADMOUNTED, 4-600 SWITCHES
10988	2	ROD, GROUND 5/8" X 8', 13 MIL CU CLAD
10262	2	CLAMP, GRD ROD GALV 3/4 L
10333	13	CONN, SPLIT BOLT CC #2 L
11196	6.148 lbs	WIRE, COPPER BARE S.D. #2 7 STR L
10732	4	INSECTICIDE ANT CONTROL L
10779	10	LOCK, PADLOCK, STANDARD WITH BEC LOGO
11202	26.12 lbs	WIRE, COPPER BARE 4/0 19 STR L

Bluebonnet	DATE APPROVED: MARCH 8, 2017	UNDERGROUND DISTRIBUTION

USGE-11 SWITCHGEAR
CONSTRUCTION STANDARD

SOURCE

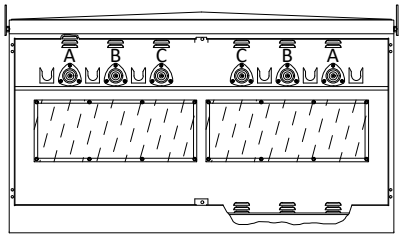

TAP

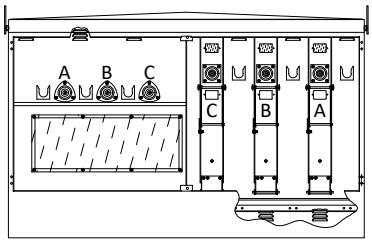

FRONT

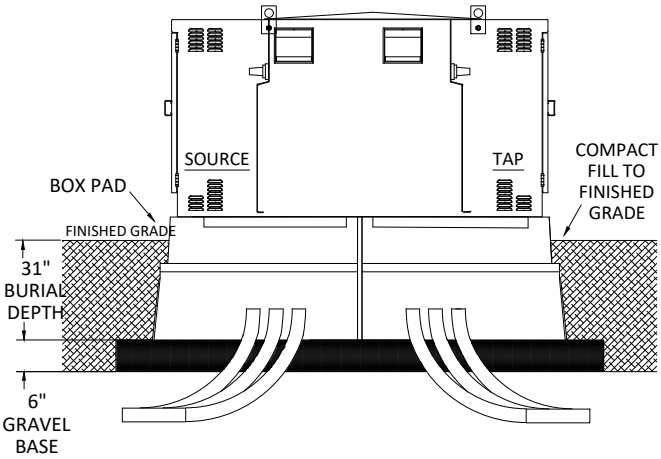

TOP VIEW

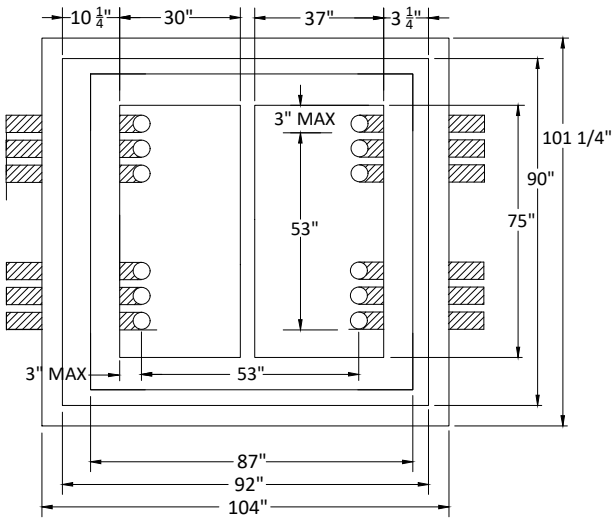

BEC STK#:	QTY:	MATERIAL USGE-11:
12971	1	SWITCHGEAR, AIR, 1-200 FUSE, 3-600 SWITCHES
10988	2	ROD, GROUND 5/8" X 8', 13 MIL CU CLAD
10262	2	CLAMP, GRD ROD GALV 3/4 L
10333	13	CONN, SPLIT BOLT CC #2 L
11196	6.148 lbs	WIRE, COPPER BARE S.D. #2 7 STR L
10732	4	INSECTICIDE ANT CONTROL L
10779	8	LOCK, PADLOCK, STANDARD WITH BEC LOGO
10386	3	CONN,INSUL.L.B.PARKING STAND L
10237	3	CAPS, ASSY GRD TERMINATION L
11202	26.12 lbs	WIRE, COPPER BARE 4/0 19 STR L
10172	3	BUSHING, LB INSERT 25KV L
14300	3	FITTING, FUSE END, SM-20, 15/25 KV L

Bluebonnet	DATE APPROVED: MARCH 8, 2017	UNDERGROUND DISTRIBUTION

SELF CONTAINED (200 AMPS OR LESS)

☐ Form 2s

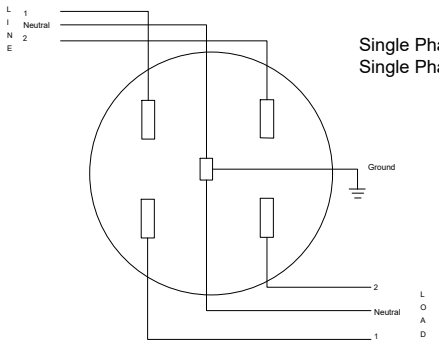

Single Phase 3 Wire 120 - 240 Volt
Single Phase 3 Wire 240 - 480 Volt

Meter Specs:

- ☐ MS-10115
- ☐ MS-10119
- ☐ MS-102
- ☐ MS-103MT
- ☐ MS-103WT
- ☐ MS-105
- ☐ MS-106
- ☐ MS-106A
- ☐ MS-201
- ☐ MS-206
- ☐ MS-207
- ☐ MS-303

☐ Form 12s

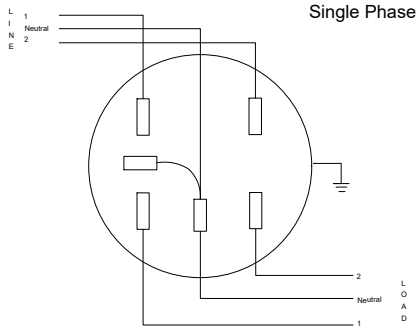

Single Phase 3 Wire 120 - 208 Volt Wye

Meter Specs:

- ☐ MS-10115
- ☐ MS-10119
- ☐ MS-102
- ☐ MS-103MT
- ☐ MS-103WT
- ☐ MS-105
- ☐ MS-106
- ☐ MS-106A
- ☐ MS-201
- ☐ MS-206
- ☐ MS-207
- ☐ MS-303

☐ Form 12s

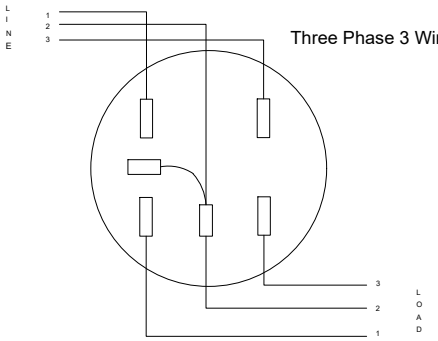

Three Phase 3 Wire Straight 480 Volt Delta

Meter Specs:

- ☐ MS-10115
- ☐ MS-10119
- ☐ MS-102
- ☐ MS-103MT
- ☐ MS-103WT
- ☐ MS-105
- ☐ MS-106
- ☐ MS-106A
- ☐ MS-301A

☐ Form 16s

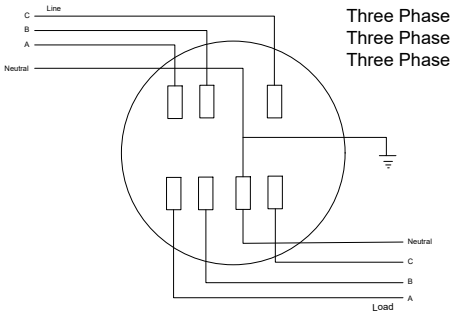

Three Phase 4 Wire 120 - 208 Volt Wye
Three Phase 4 Wire 120 - 240 Volt Delta
Three Phase 4 Wire 277 - 480 Volt Wye

Meter Specs:

- ☐ MS-10115
- ☐ MS-10119
- ☐ MS-102
- ☐ MS-103MT
- ☐ MS-103WT
- ☐ MS-105
- ☐ MS-106
- ☐ MS-106A
- ☐ MS-201
- ☐ MS-207
- ☐ MS-303

CT. RATED (LARGER THAN 200 AMPS)

☐ Form 4s

Single Phase 3 Wire 120 - 240 Volt Over 400 Amp

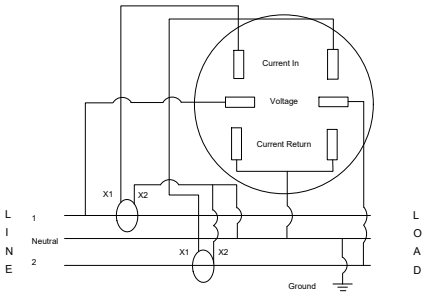

Meter Specs:

- ☐ MS-107MT
- ☐ MS-107WT
- ☐ MS-112B1
- ☐ MS-113B1
- ☐ MS-114A1
- ☐ MS-115-1
- ☐ MS-201A1
- ☐ MS-204B1

☐ Form 9s

Three Phase 4 Wire 120 - 208 Volt Wye
Three Phase 4 Wire 120 - 240 Volt Delta
Three Phase 4 Wire 277 - 480 Volt Wye

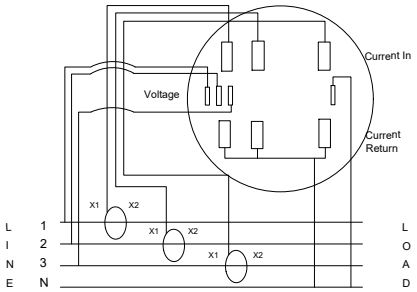

Meter Specs:

- ☐ MS-112B3
- ☐ MS-113B3
- ☐ MS-114B3
- ☐ MS-115-3
- ☐ MS-202B3
- ☐ MS-204A3
- ☐ MS-204B3

☐ Form 45s

Three Phase 3 Wire Straight 480 Volt Delta

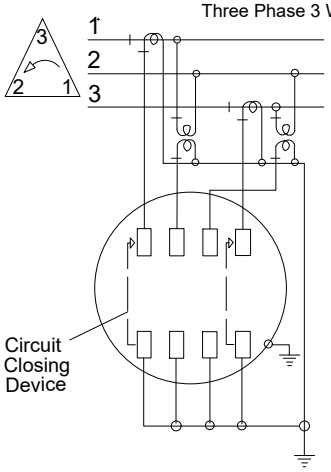

Meter Specs:

- ☐ MS-301B
- ☐ MS-301C

Bluebonnet

METER BASES

drawn:	approved:	date:	
JW	Standards	Jan. 30, 2024	-----

Notes:

1. Neutral (must be insulated) may be reduced no more than two sizes on residential application. No reduction of the neutral is allowed on commercial applications.
2. Weatherproof fittings required.
3. This meter loop specification is good for the following voltages: 120/240, 120/208, 240/480 & 277/480. Please use MS-301 for straight 480 Delta applications only.
4. Meter pole must remain free of structures and private attachments other than meter loop.
5. Bluebonnet Electric will supply ground rod.
6. On steel poles use a ⅜" X 1½" self tapping screw.
7. For your safety, only Bluebonnet personnel are authorized to install meter loops or other BEC equipment on a Bluebonnet pole. Members shall have loop assembled and available for installation by Bluebonnet.

FOR SINGLE PHASE TRAFFIC CONTROL DEVICES:
200amp, 4 terminal, 1-phase, will require a lever by-pass meeting ANSI C12.7, UL 414, and NEMA 3R rating. Lever by-pass is only required for meter installations serving traffic control devices, including railroad, that need to remain functional at all times.

FOR THREE PHASE APPILCATIONS DESCRIPTION:
200amp, 7 terminal, 3-phase, 4-wire will require a lever by-pass meeting ANSI C12.7, UL 414, an NEMA 3R. Meter cans are available for purchase through Techline or any other electrical supplier provided it meets all Bluebonnet Electric Cooperative specifications.
Techline (512-332-2978)

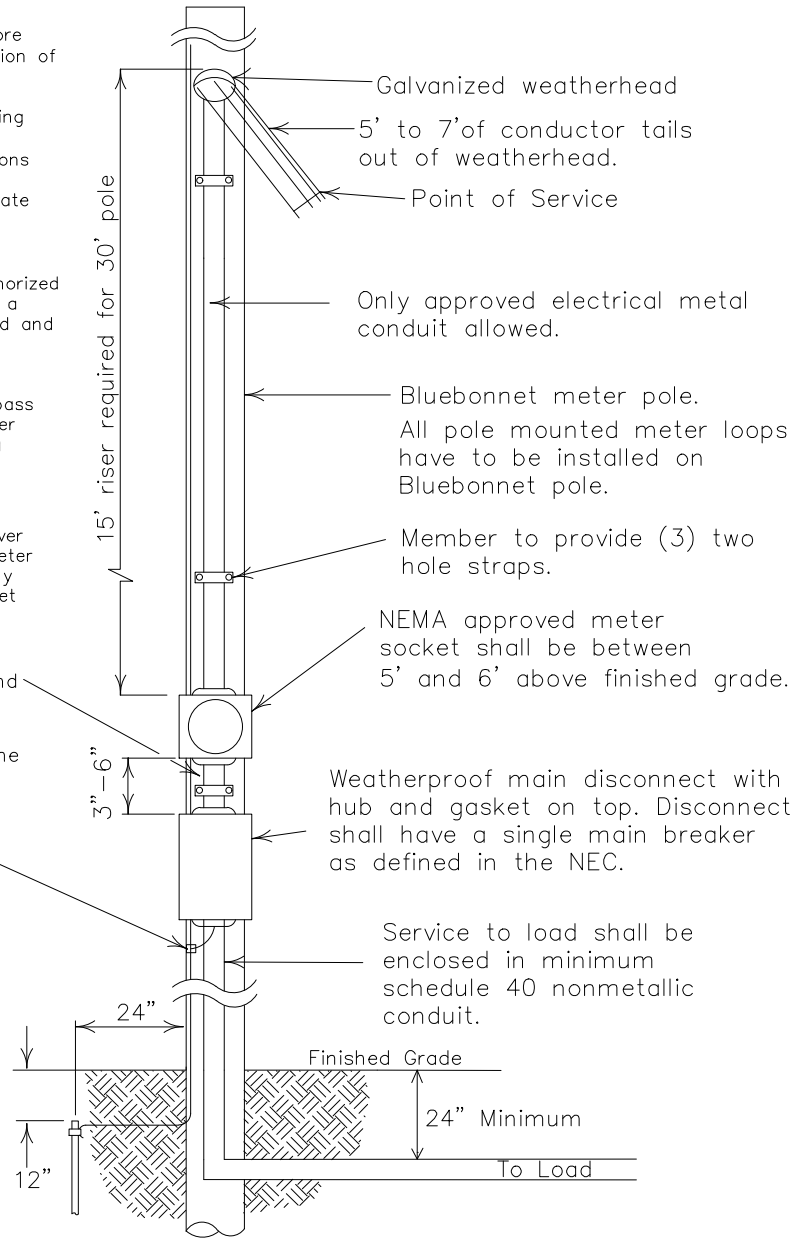

* WIRING INSTALLATIONS MUST MEET LOCAL GUIDELINES, IF APPLICABLE, SET FORTH BY CITY, COUNTY, OR OTHER GOVERNING ENTITY IN THE EVENT THESE REQUIREMENTS ARE MORE STRINGENT THAN BLUEBONNET SPECIFICATIONS. *

FOR THE MEMBER'S SAFETY, WIRING INSTALLATIONS SHALL CONFORM TO THE REQUIREMENTS OF THE NEC, TDLR AND NESC.

Latest update can be found at http://www.bluebonnetelectric.coop

CURRENT CARRYING CAPACITIES AND CONDUIT/NIPPLE SIZE REQUIREMENTS OF STANDARD WIRE SIZES

(RHH, RHW, THW, THWN, THHN, AND XHHW)

REFER TO NEC FOR OTHER CALCULATIONS.

COPPER CONDUCTOR

Wire Size	Breaker Size	Conduit/Nipple Size
#6	60 Amp	1¼" Conduit
#4	100 Amp	1¼" Conduit
#2	125 Amp	1½" Conduit
#1	150 Amp	2" Conduit
#2/0	200 Amp	2" Conduit

ALUMINUM CONDUCTOR

Wire Size	Breaker Size	Conduit/Nipple Size
#4	60 Amp	1¼" Conduit
#2	100 Amp	1¼" Conduit
#1/0	125 Amp	1½" Conduit
#2/0	150 Amp	2" Conduit
#4/0	200 Amp	2" Conduit

15' METER LOOP

1Ø OR 3Ø 60-200 AMP
METER LOOP ON METER POLE
(GOOD FOR VOLTAGES: 120/240, 120/208, 240/480, 277/480)

DATE	REVISIONS
11-27-17	ADDED NIPPLE AFTER CONDUIT SIZE
03-31-20	ADDED NOTE 7
11-04-21	ADDED MAIN BREAKER NOTE

Bluebonnet

Drawn By :	Checked By :	Approved By :
RG	MS COMMITTEE	MS COMMITTEE
Scale : NONE	Date: 11-04-2021	MS-10115

Notes:

1. Neutral (must be insulated) may be reduced no more than two sizes on residential application. No reduction of the neutral is allowed on commercial applications.
2. Weatherproof fittings required.
3. This meter loop specification is good for the following voltages: 120/240, 120/208, 240/480 & 277/480. Please use MS-301 for straight 480 Delta applications only.
4. Meter pole must remain free of structures and private attachments other than meter loop.
5. Bluebonnet Electric will supply ground rod.
6. On steel poles use a ⅜" X 1½" self tapping screw.
7. For your safety, only Bluebonnet personnel are authorized to install meter loops or other BEC equipment on a Bluebonnet pole. Members shall have loop assembled and available for installation by Bluebonnet.

FOR SINGLE PHASE TRAFFIC CONTROL DEVICES:
200amp, 4 terminal, 1-phase, will require a lever by-pass meeting ANSI C12.7, UL 414, and NEMA 3R rating. Lever by-pass is only required for meter installations serving traffic control devices, including railroad, that need to remain functional at all times.

FOR THREE PHASE APPILCATIONS DESCRIPTION:
200amp, 7 terminal, 3-phase, 4-wire will require a lever by-pass meeting ANSI C12.7, UL 414, an NEMA 3R. Meter cans are available for purchase through Techline or any other electrical supplier provided it meets all Bluebonnet Electric Cooperative specifications.
Techline (512-332-2978)

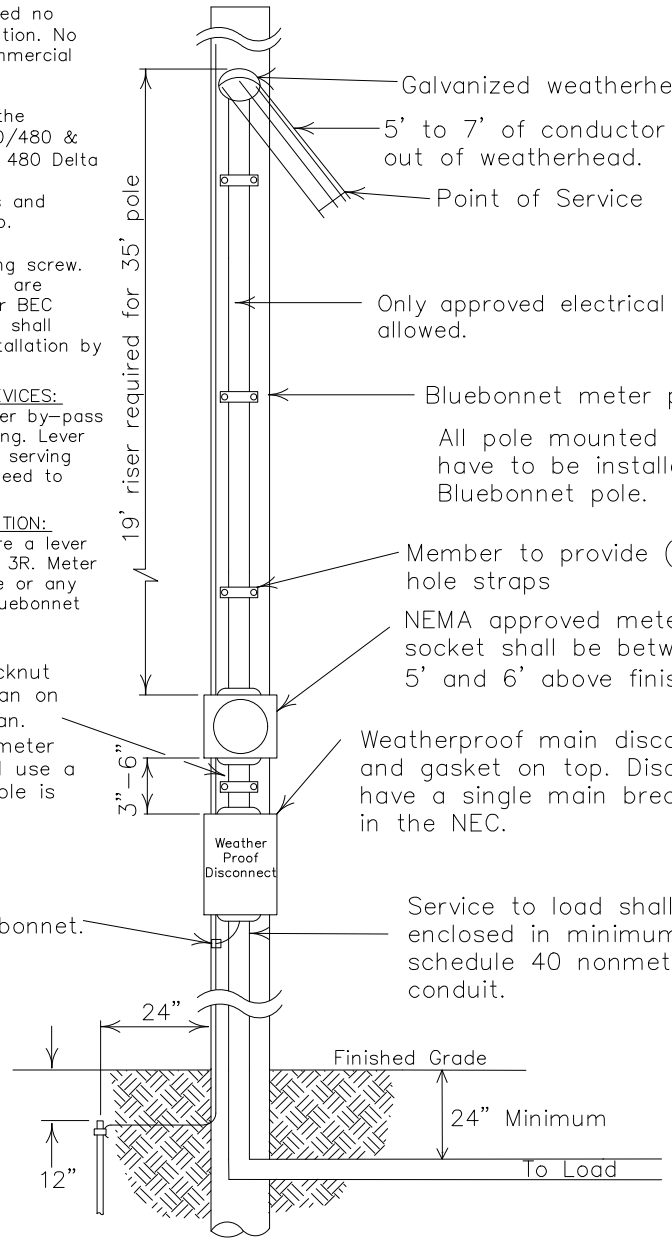

WIRING INSTALLATIONS MUST MEET LOCAL GUIDELINES, IF APPLICABLE, SET FORTH BY CITY, COUNTY, OR OTHER GOVERNING ENTITY IN THE EVENT THESE REQUIREMENTS ARE MORE STRINGENT THAN BLUEBONNET SPECIFICATIONS.

FOR THE MEMBER'S SAFETY, WIRING INSTALLATIONS SHALL CONFORM TO THE REQUIREMENTS OF THE NEC, TDLR AND NESC.

Latest update can be found at http://www.bluebonnetelectric.coop

CURRENT CARRYING CAPACITIES AND CONDUIT/NIPPLE SIZE REQUIREMENTS OF STANDARD WIRE SIZES

(RHH, RHW, THW, THWN, THHN, AND XHHW)

REFER TO NEC FOR OTHER CALCULATIONS.

COPPER CONDUCTOR

Wire Size	Breaker Size	Conduit/Nipple Size
#6	60 Amp	1¼" Conduit
#4	100 Amp	1¼" Conduit
#2	125 Amp	1½" Conduit
#1	150 Amp	2" Conduit
#2/0	200 Amp	2" Conduit

ALUMINUM CONDUCTOR

Wire Size	Breaker Size	Conduit/Nipple Size
#4	60 Amp	1¼" Conduit
#2	100 Amp	1¼" Conduit
#1/0	125 Amp	1½" Conduit
#2/0	150 Amp	2" Conduit
#4/0	200 Amp	2" Conduit

19' METER LOOP

1Ø OR 3Ø 60-200 AMP
METER LOOP ON METER POLE
(GOOD FOR VOLTAGES: 120/240, 120/208, 240/480, 277/480)

DATE	REVISIONS
11-27-17	ADDED NIPPLE AFTER CONDUIT SIZE
03-31-20	ADDED NOTE 7
11-04-21	ADDED MAIN BREAKER NOTE

Bluebonnet

Drawn By :	Checked By :	Approved By :
RG	MS COMMITTEE	MS COMMITTEE
Scale : NONE	Date: 11-04-2021	MS-10119

FOR THREE PHASE APPLICATIONS DESCRIPTION:
200amp, 7 terminal, 3-phase, 4-wire will require a lever by-pass meeting ANSI C12.7, UL 414, and NEMA 3R. Meter cans are available for purchase through Techline (Red Rock 512-332-2978) or any other electrical supplier provided it meets all Bluebonnet Electric Cooperative specifications.

FOR SINGLE PHASE TRAFFIC CONTROL DEVICES:
200amp, 4 terminal, 1-phase, will require a lever by-pass meeting ANSI C12.7, UL 414, and NEMA 3R rating. Lever by-pass is only required for meter installations serving traffic control devices, including railroad, that need to remain functional at all times.

Notes:

1. Neutral must be insulated and may be reduced no more than two sizes on residential application. No reduction of the neutral is allowed on commercial application.
2. Weatherproof fittings required.
3. Bluebonnet's pole must remain free of structures and private attachments other than meter loop.
4. All secondary connections made by BEC.
5. This meter loop specification is good for the following voltages: 120/240, 120/208, 277/480, 240/480 (Single phase only). Please use MS-301 for straight 480 Delta applications.
6. Bluebonnet Electric will supply ground rod.
7. On steel poles use a ⅜" x 1½" self tapping screw.
8. For your safety, only Bluebonnet personnel are authorized to install meter loops or other BEC equipment on a Bluebonnet pole. Members shall have loop assembled and available for installation by Bluebonnet.

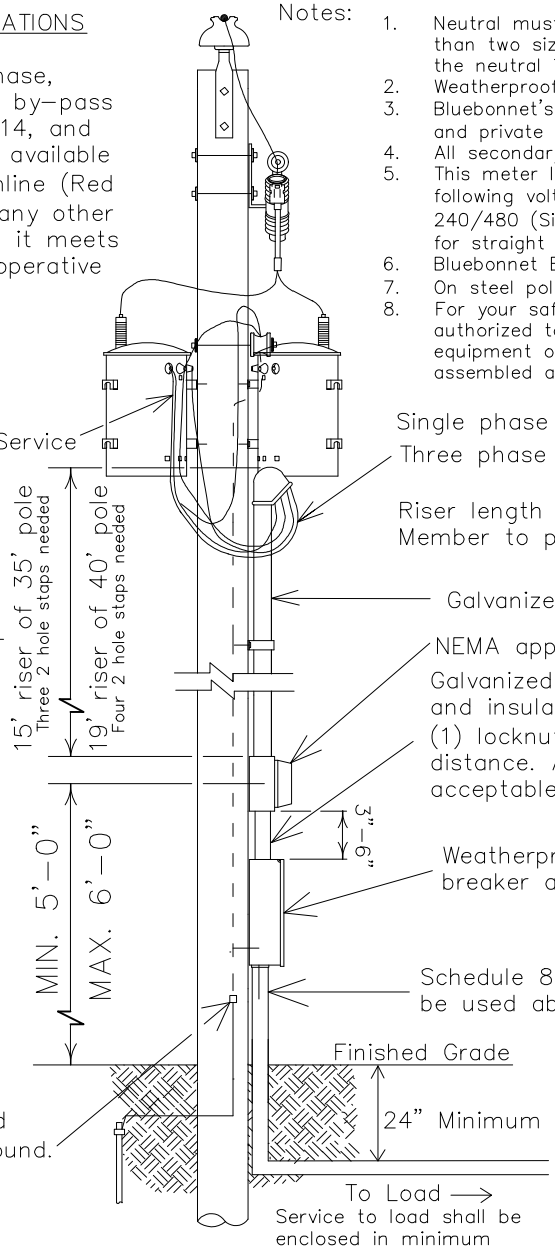

Single phase 7' of conductor tails.
Three phase 10' of conductor tails.

Riser length (Weatherhead to top of Meter Can) Member to provide 3 two hole straps.

Galvanized electrical metal conduit.

NEMA approved meter socket.

Galvanized steel conduit with (1) locknut and insulating bushing inside meter can and (1) locknut under meter can. Maintain 3"-6" distance. A straight or offset nipple is acceptable.

Weatherproof disconnect with single main breaker as defined in the NEC.

Schedule 80 PVC pipe shall be used above ground.

#6 solid, bare ground wire and clamp attached to Bluebonnet's pole ground.

Service to load shall be enclosed in minimum schedule 40 nonmetallic conduit.

FOR THE MEMBER'S SAFETY, WIRING INSTALLATIONS SHALL CONFORM TO THE REQUIREMENTS OF THE NEC, TDLR AND NESC.

* WIRING INSTALLATIONS MUST MEET LOCAL GUIDELINES, IF APPLICABLE, SET FORTH BY CITY, COUNTY, OR OTHER GOVERNING ENTITY IN THE EVENT THESE REQUIREMENTS ARE MORE STRINGENT THAN BLUEBONNET SPECIFICATIONS. *

Latest update can be found at http://www.bluebonnetelectric.coop

CURRENT CARRYING CAPACITIES AND CONDUIT/NIPPLE SIZE REQUIREMENTS OF STANDARD WIRE SIZES
(RHH, RHW, THW, THWN, AND XHHW)
REFER TO NEC FOR OTHER CALCULATIONS.

COPPER CONDUCTOR

Wire Size	Breaker Size	Conduit/Nipple Size
#6	60 Amp	1¼" Conduit
#4	100 Amp	1¼" Conduit
#2	125 Amp	1½" Conduit
#1	150 Amp	2" Conduit
#2/0	200 Amp	2" Conduit

ALUMINUM CONDUCTOR

Wire Size	Breaker Size	Conduit/Nipple Size
#4	60 Amp	1¼" Conduit
#2	100 Amp	1¼" Conduit
#1/0	125 Amp	1½" Conduit
#2/0	150 Amp	2" Conduit
#4/0	200 Amp	2" Conduit

1Ø OR 3Ø 60-200 AMP METER LOOP ON TRANSFORMER POLE

Bluebonnet

DATE	REVISIONS
11-27-17	ADDED NIPPLE AFTER CONDUIT SIZE
03-18-20	ADDED NOTE 8
11-04-21	ADDED MAIN BREAKER NOTE

Drawn By :	Checked By :	Approved By :
RG	MS COMMITTEE	MS COMMITTEE
Scale : NONE	Date: 11-04-2021	MS-102

Notes:

1. Wire sized to total disconnect size. (See Chart Below)
2. Neutral must be insulated and may be reduced no more than two sizes on residential application. No reduction of the neutral is allowed on commercial application.
3. Weatherproof fittings required.
4. Meter loop must remain unenclosed on exterior of structure.
5. Meter loop can not be mounted on the side of a mobile home.
6. Reference NEC SEC. 230.9 (A) for meter clearances that state three feet from openings.
7. Member to provide a secure and reinforced point to connect service attachment.
8. The main electrical disconnect for each electrical service shall be installed on the exterior of the building in a location approved by Bluebonnet Electric Cooperative.

Latest update can be found at www.bluebonnetelectric.coop

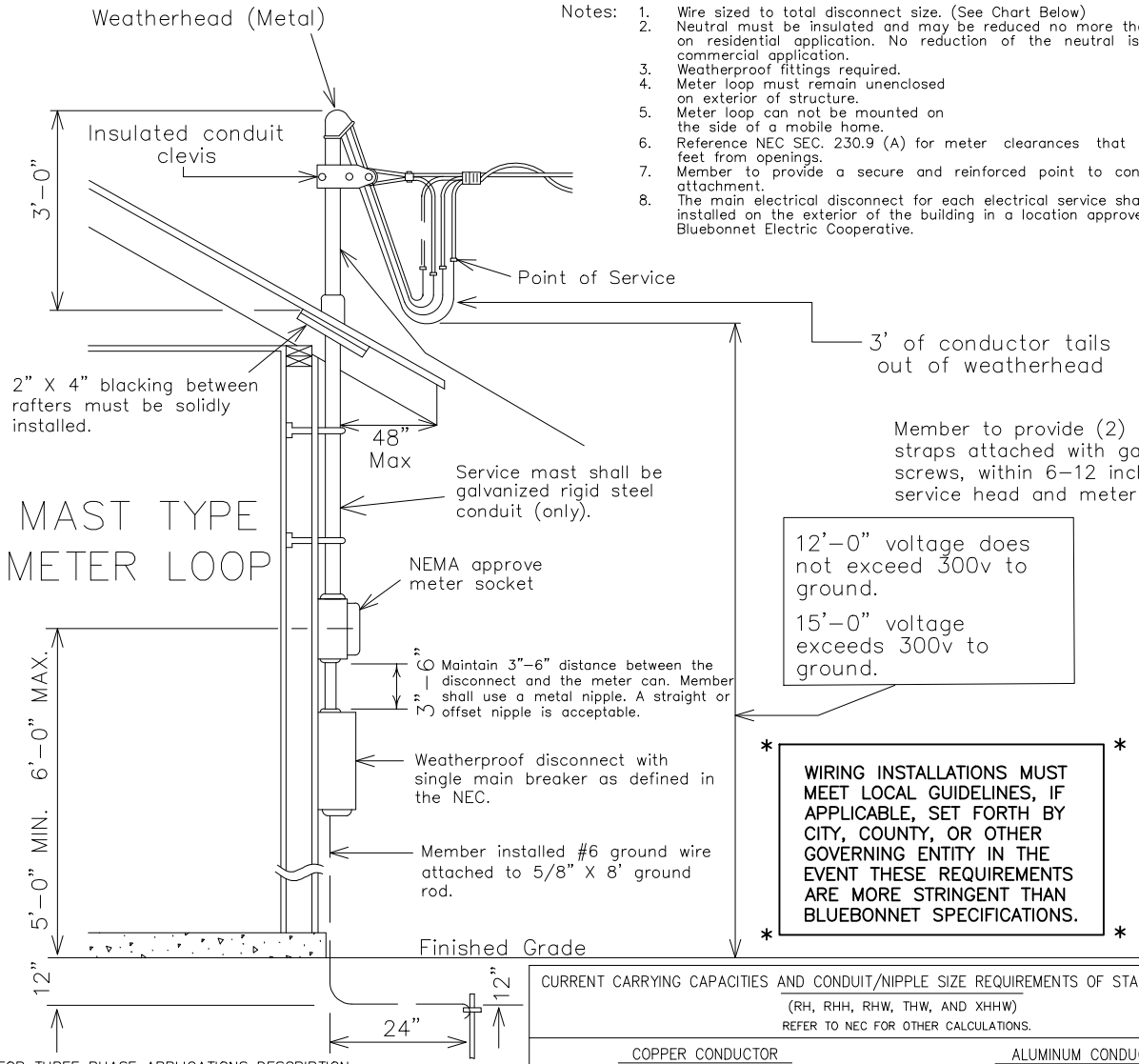

12'-0" voltage does not exceed 300v to ground.

15'-0" voltage exceeds 300v to ground.

* WIRING INSTALLATIONS MUST MEET LOCAL GUIDELINES, IF APPLICABLE, SET FORTH BY CITY, COUNTY, OR OTHER GOVERNING ENTITY IN THE EVENT THESE REQUIREMENTS ARE MORE STRINGENT THAN BLUEBONNET SPECIFICATIONS. *

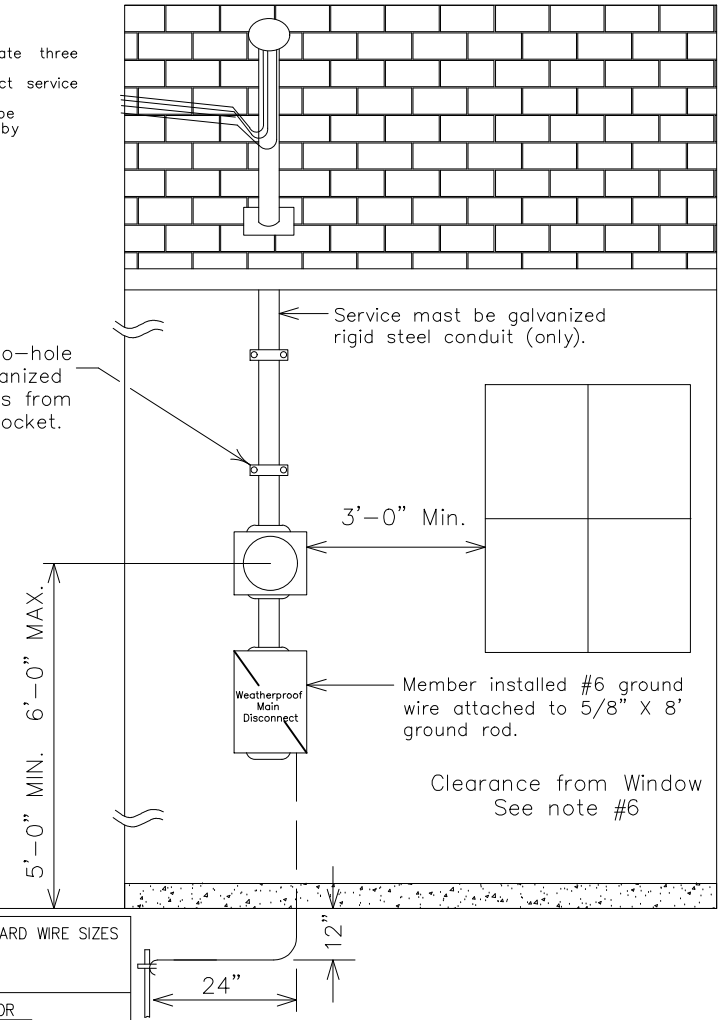

CURRENT CARRYING CAPACITIES AND CONDUIT/NIPPLE SIZE REQUIREMENTS OF STANDARD WIRE SIZES

(RH, RHH, RHW, THW, AND XHHW)

REFER TO NEC FOR OTHER CALCULATIONS.

COPPER CONDUCTOR			ALUMINUM CONDUCTOR		
Wire Size	Breaker Size	Conduit/Nipple Size	Wire Size	Breaker Size	Conduit/Nipple Size
#6	60 Amp	1¼" Conduit	#4	60 Amp	1 "¼Conduit
#4	100 Amp	1¼" Conduit	#2	100 Amp	1 "¼Conduit
#2	125 Amp	1½" Conduit	#1/0	125 Amp	1 "½Conduit
#1	150 Amp	2" Conduit	#2/0	150 Amp	2" Conduit
#2/0	200 Amp	2" Conduit	#4/0	200 Amp	2" Conduit

FOR THREE PHASE APPLICATIONS DESCRIPTION:
200amp, 7 terminal, 3-phase, 4-wire will require a lever by-pass meeting ANSI C12.7, UL 414, and NEMA 3R. Meter cans are available for purchase through Techline or any other electrical supplier provided it meets all Bluebonnet Electric Cooperative specifications.
Techline (512-332-2978)

FOR THE MEMBER'S SAFETY, WIRING INSTALLATIONS SHALL CONFORM TO THE REQUIREMENTS OF THE NEC, TDLR AND NESC.

Bluebonnet

1Ø OR 3Ø 60-200 AMP METER LOOP ON BUILDING, MAST TYPE

DATE	REVISIONS
11-27-17	ADDED NIPPLE TO CONDUIT SIZE
11-04-21	ADDED MAIN BREAKER NOTE

Drawn By :	Checked By :	Approved By :
RG	MS COMMITTEE	MS COMMITTEE
Scale : NONE	Date: 11-04-21	MS-103MT

Notes:

1. Wire sized to total disconnect size.
2. Neutral may be reduced no more than two sizes on residental application. No reduction of the neutral is allowed on commercial application.
3. Weatherproof fittings required.
4. Meter loop must remain unenclosed on exterior of structure.
5. Meter loop cannot be mounted on the side of a mobile home.
6. Reference NEC SEC. 230.9 (A) for meter clearances that state three feet from openings.
7. Member to provide a secure and reinforced point to connect service attachment.
8. The main electrical disconnect for each electrical service shall be installed on the exterior of the building in a location approved by Bluebonnet Electric Cooperative.

FOR THREE PHASE APPLICATIONS
DESCRIPTION:
200amp, 7 terminal, 3–phase, 4–wire will require a lever by–pass meeting ANSI C12.7, UL 414, and NEMA 3R. Meter cans are available for purchase through Techline or any other electrical supplier provided it meets all Bluebonnet Electric Cooperative specifications.
Techline (512–332–2978)

WALL TYPE METER LOOP

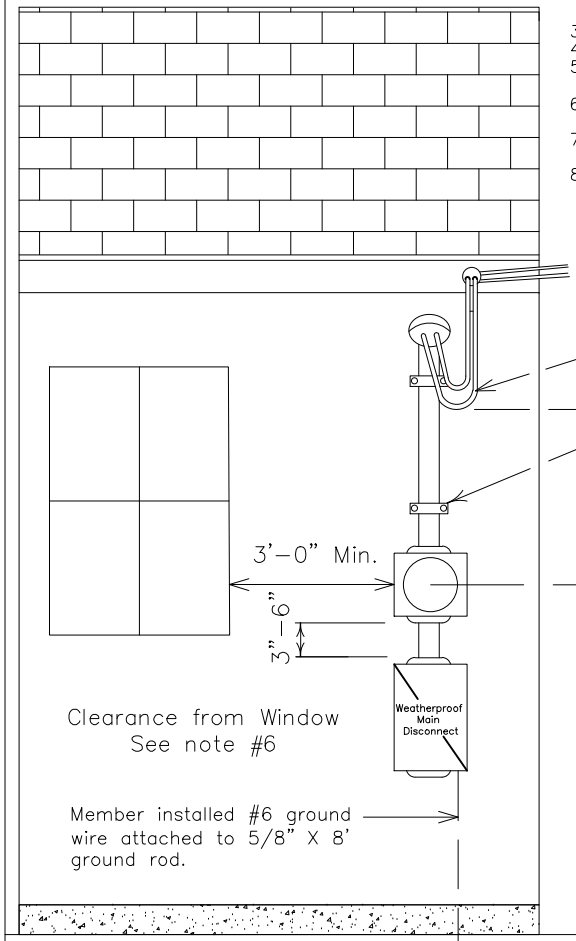

12'–0" voltage does not exceed 300v to ground.
15'–0" voltage exceeds 300v to ground.

* WIRING INSTALLATIONS MUST MEET LOCAL GUIDELINES, IF APPLICABLE, SET FORTH BY CITY, COUNTY, OR OTHER GOVERNING ENTITY IN THE EVENT THESE REQUIREMENTS ARE MORE STRINGENT THAN BLUEBONNET SPECIFICATIONS. *

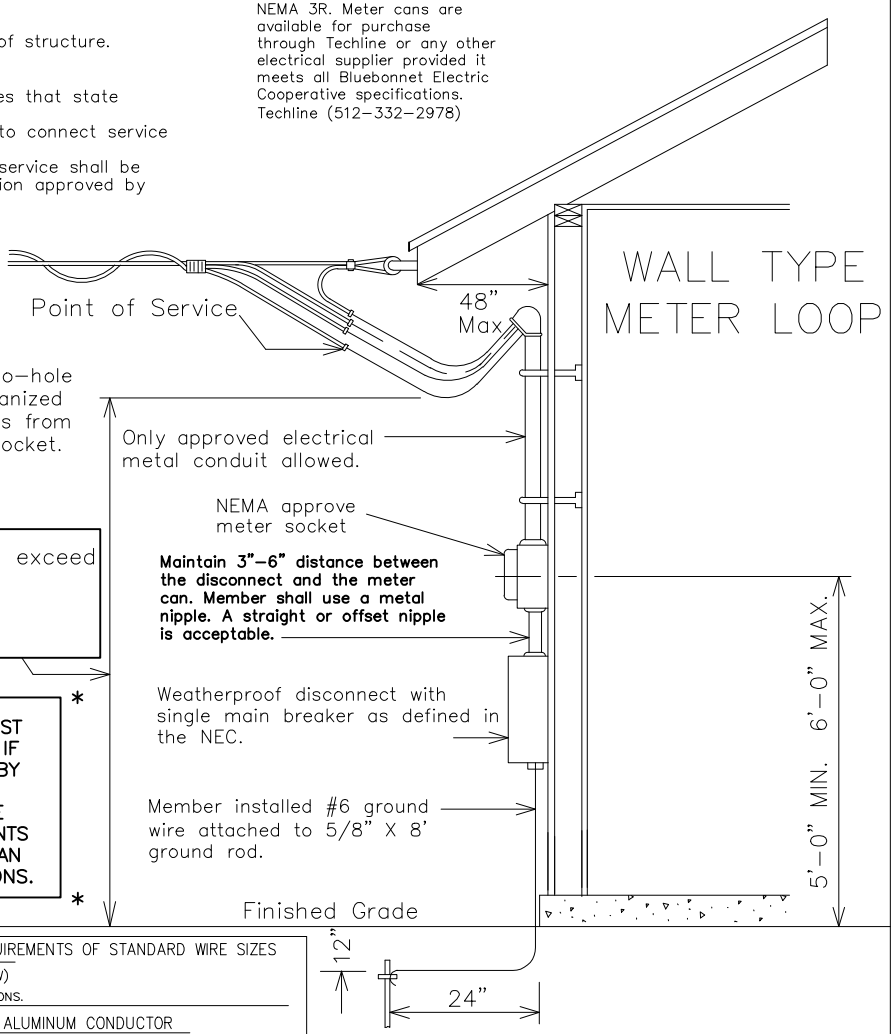

FOR THE MEMBER'S SAFETY, WIRING INSTALLATION AND MATERIAL SHALL CONFORM TO THE REQUIREMENTS OF THE NEC, TDLR AND NESC.

CURRENT CARRYING CAPACITIES AND CONDUIT/NIPPLE SIZE REQUIREMENTS OF STANDARD WIRE SIZES
(RH, RHH, RHW, THW, AND XHHW)
REFER TO NEC FOR OTHER CALCULATIONS.

COPPER CONDUCTOR			ALUMINUM CONDUCTOR		
Wire Size	Breaker Size	Conduit/Nipple Size	Wire Size	Breaker Size	Conduit/Nipple Size
#6	60 Amp	1¼" Conduit	#4	60 Amp	1¼" Conduit
#4	100 Amp	1¼" Conduit	#2	100 Amp	1¼" Conduit
#2	125 Amp	1½" Conduit	#1/0	125 Amp	1½" Conduit
#1	150 Amp	2" Conduit	#2/0	150 Amp	2" Conduit
#2/0	200 Amp	2" Conduit	#4/0	200 Amp	2" Conduit

Latest update can be found at www.bluebonnetelectric.coop

Bluebonnet

1Ø OR 3Ø 60–200 AMP METER LOOP ON BUILDING, WALL TYPE

Date	REVISIONS
11–27–17	ADDED NIPPLE TO CONDUIT SIZE
11–04–21	ADDED MAIN BRAKER NOTE

Drawn By :	Checked By :	Approved By :
RG	MS COMMITTEE	MS COMMITTEE
Scale : NONE	Date: 11–04–20	MS–103WT

Notes:

1. Line taps shall be made in the galvanized trough by the electrical contractor.
   No more than (2) conductors per phase shall be allowed.
2. No more than (2) risers will be connected per installation.
3. Weatherproof fittings required.
4. Wire sized to total disconnect sizes.
5. Neutral(s) may be reduced no more than two sizes on residential application. No reduction of the neutral is allowed on commercial application.
6. Bluebonnet pole must remain free of structures and private attachments other than meter loop riser assembly.
7. Meter assembly must remain unenclosed on exterior of structure.
8. Meter assembly cannot be mounted on a mobile home.
9. If secondary service exceeds (2) 2", 3", or 4" approved electrical metal conduit; BEC will install a primary underground transformer at member's expense.
10. Maintain 3"–6" distance between the disconnect and the meter can. Member shall use a metal nipple. A straight or offset nipple is acceptable.
11. #6 solid, bare ground copper wire and clamp attached to Bluebonnet's pole ground.
12. The main electrical disconnect for each electrical service shall be installed on the exterior of the building in a location approved by Bluebonnet Electric Cooperative.

Ⓐ
Transformer Pole Riser Length:
35' Pole = 20' Riser
40' Pole = 24' Riser

Ⓑ
Service Pole Riser Length:
30' Pole = 20' Riser
35' Pole = 24' Riser

Ⓒ
Member's Conduit
Member's conduit shall be installed 8"–12" from pole.

RISER ONLY
Only 2", 3", or 4" approved electrical metal conduct allowed above finished grade. Risers will not exceed 2 risers per pole. Member will provide 10' of conductor tails from top of weatherhead. BEC to supply Stand–Offs. (Bluebonnet to mount risers to pole)

FOR THREE PHASE APPICATIONS
DESCRIPTION:
200amp, 7 terminal, 3–phase, 4–wire will require a lever by–pass meeting ANSI C12.7, UL 414, and NEMA 3R. Meter cans are available for purchase through Techlineor any other electrical supplier provided it meets all Bluebonnet Electric Cooperative specifications.
Techline (512–332–2978)

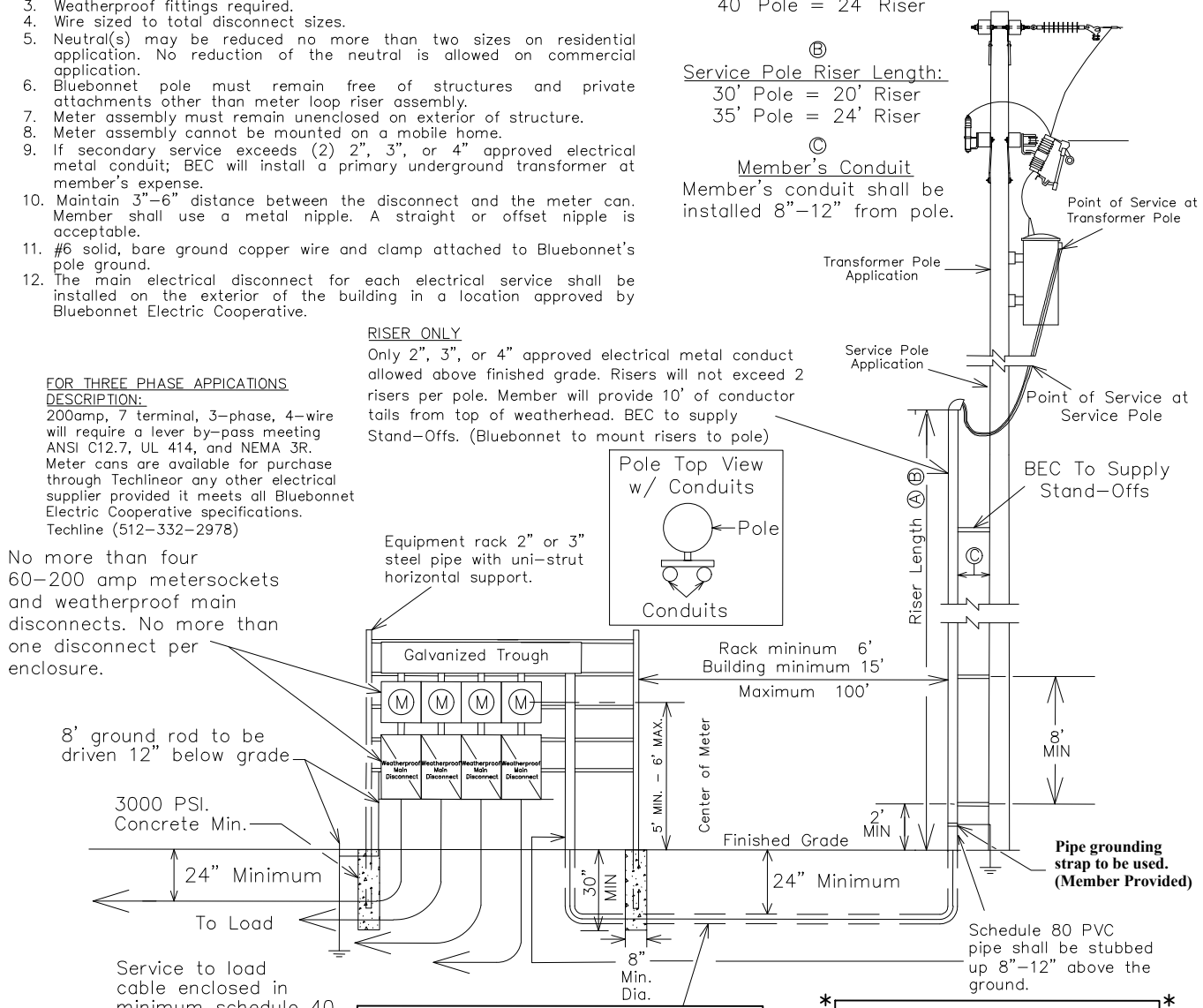

Minimum schedule 40 rigid nonmetallic service conduit below finished grade. No schedule 40 conduit allowed above ground level on source side of main disconnect.

FOR THE MEMBER'S SAFETY, WIRING INSTALLATION AND MATERIAL SHALL CONFORM TO THE REQUIREMENTS OF THE NEC, TDLR AND NESC.

* WIRING INSTALLATIONS MUST MEET LOCAL GUIDELINES, IF APPLICABLE, SET FORTH BY CITY, COUNTY, OR OTHER GOVERNING ENTITY IN THE EVENT THESE REQUIREMENTS ARE MORE STRINGENT THAN BLUEBONNET SPECIFICATIONS. *

Latest update can be found at
www.bluebonnetelectric.coop

CURRENT CARRYING CAPACITIES AND CONDUIT/NIPPLE SIZE REQUIREMENT OF STANDARD WIRE SIZE.
(RHH, RHW, THW, THWN, THHN, AND XHHW)
REFER TO NEC FOR OTHER CALCULATIONS.

WIRE SIZE	COPPER CONDUCTOR/ BREAKER SIZE	CONDUIT/NIPPLE SIZE	ALUMINUM CONDUCTOR WIRE SIZE	BREAKER SIZE	CONDUIT/NIPPLE SIZE
#6	60 AMP	1¼" CONDUIT	#4	60 AMP	1¼" CONDUIT
#4	100 AMP	1¼" CONDUIT	#2	100 AMP	1¼" CONDUIT
#2	125 AMP	1½" CONDUIT	#1/0	125 AMP	1½" CONDUIT
#1	150 AMP	2" CONDUIT	#2/0	150 AMP	2" CONDUIT
#2/0	200 AMP	2" CONDUIT	#4/0	200 AMP	2" CONDUIT

1Ø OR 3Ø 60–200 AMP MULTIPLE METERS ON RACK OR BUILDING NOT TO EXCEED A TOTAL OF 800 AMPS

Bluebonnet

DATE	REVISIONS
12–07–2017	ADDED WIRE SIZING CHART.
11–19–2019	ADDED SOLID COPPER NOTE.
11–04–2021	ADDED MAIN BREAKER NOTE.

Drawn By :	Checked By :	Approved By :
RG	MS COMMITTEE	MS COMMITTEE
Scale : NONE	Date : 11–04–2021	MS–105

CURRENT CARRYING CAPACITIES AND CONDUIT/NIPPLE SIZE REQUIREMENT OF STANDARD WIRE SIZE.

(RHH, RHW, THW, THWN, THHN, AND XHHW)

REFER TO NEC FOR OTHER CALCULATIONS.

COPPER CONDUCTOR

WIRE SIZE	BREAKER SIZE	CONDUIT/NIPPLE SIZE
#6	60 AMP	1¼" CONDUIT
#4	100 AMP	1¼" CONDUIT
#2	125 AMP	1½" CONDUIT
#1	150 AMP	2" CONDUIT
#2/0	200 AMP	2" CONDUIT

ALUMINUM CONDUCTOR

WIRE SIZE	BREAKER SIZE	CONDUIT/NIPPLE SIZE
#4	60 AMP	1¼" CONDUIT
#2	100 AMP	1¼" CONDUIT
#1/0	125 AMP	1½" CONDUIT
#2/0	150 AMP	2" CONDUIT
#4/0	200 AMP	2" CONDUIT

Notes:

1. Weatherproof fittings required.
2. Wire sized to total disconnect size.
3. Neutral may only be reduced two sizes on residential application. No reduction of the neutral is allowed on commercial application.
4. Bluebonnet pole must remain free of structures and private attachments other than meter loop riser assembly.
5. Meter assembly must remain unenclosed on exterior of structure.
6. Meter assembly cannot be mounted on a mobile home.
7. All secondary connections made by BEC.
8. #6 solid, bare ground copper wire and clamp attached to Bluebonnet's pole ground.
9. The main electrical disconnect for each electrical service shall be installed on the exterior of the building in a location approved by Bluebonnet Electric Cooperative.

Ⓐ Riser Length:

35' Pole = 20' Riser

40' Pole = 24' Riser

FOR THREE PHASE APPLICATIONS DESCRIPTION:

200amp, 7 terminal, 3-phase, 4-wire will require a lever by-pass meeting ANSI C12.7, UL 414, and NEMA 3R. Meter cans are available for purchase through Techline or any other electrical supplier provided it meets all Bluebonnet Electric Cooperative specifications. Techline (512-332-2978)

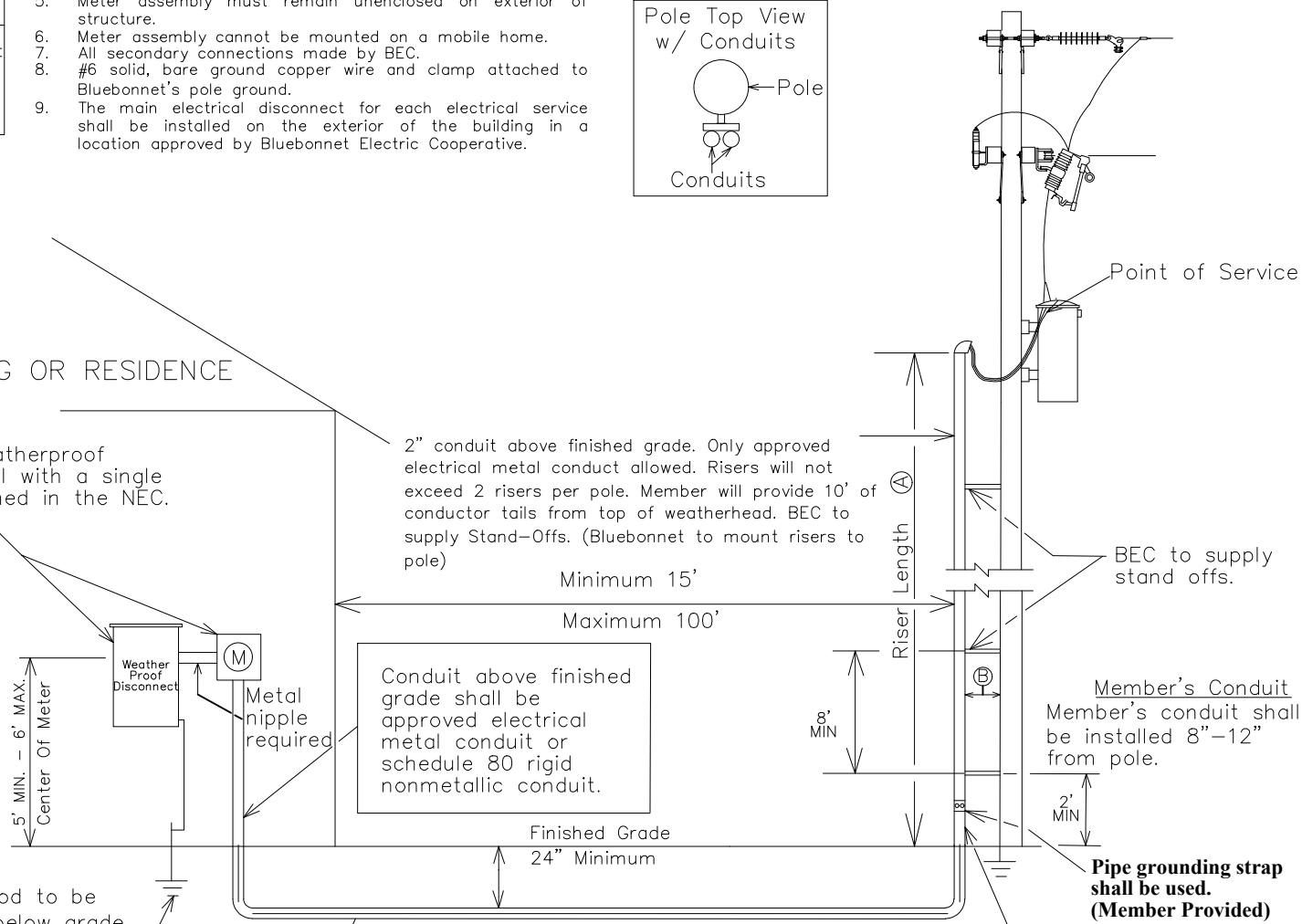

* WIRING INSTALLATIONS MUST MEET LOCAL GUIDELINES, IF APPLICABLE, SET FORTH BY CITY, COUNTY, OR OTHER GOVERNING ENTITY IN THE EVENT THESE REQUIREMENTS ARE MORE STRINGENT THAN BLUEBONNET SPECIFICATIONS. *

FOR THE MEMBER'S SAFETY, WIRING INSTALLATION AND MATERIAL SHALL CONFORM TO THE REQUIREMENTS OF THE NEC, TDLR AND NESC.

Latest update can be found at www.bluebonnetelectric.coop

Bluebonnet

1Ø OR 3Ø 60-200 AMP
METER ON BUILDING OR RACK

DATE	REVISIONS
03-29-2018	MOVED DISCONNECT TO THE SIDE OF METER
11-19-2019	ADDED SOLID COPPER NOTE
11-04-2021	ADDED MAIN BREAKER NOTE

Drawn By :	Checked By :	Approved By :
CV	MS COMMITTEE	MS COMMITTEE
Scale : NONE	Date : 11-04-2021	MS-106

CURRENT CARRYING CAPACITIES AND CONDUIT/NIPPLE SIZE REQUIREMENT OF STANDARD WIRE SIZE.

(RHH, RHW, THW, THWN, THHN, AND XHHW)

REFER TO NEC FOR OTHER CALCULATIONS.

COPPER CONDUCTOR		
WIRE SIZE	BREAKER SIZE	CONDUIT/NIPPLE SIZE
#6	60 AMP	1¼" CONDUIT
#4	100 AMP	1¼" CONDUIT
#2	125 AMP	1½" CONDUIT
#1	150 AMP	2" CONDUIT
#2/0	200 AMP	2" CONDUIT

ALUMINUM CONDUCTOR		
WIRE SIZE	BREAKER SIZE	CONDUIT/NIPPLE SIZE
#4	60 AMP	1¼" CONDUIT
#2	100 AMP	1¼" CONDUIT
#1/0	125 AMP	1½" CONDUIT
#2/0	150 AMP	2" CONDUIT
#4/0	200 AMP	2" CONDUIT

Notes:

1. Weatherproof fittings required.
2. Wire sized to total disconnect size.
3. Neutral may only be reduced two sizes on residential application. No reduction of the neutral is allowed on commercial application.
4. Bluebonnet pole must remain free of structures and private attachments other than meter loop riser assembly.
5. Meter assembly must remain unenclosed on exterior of structure.
6. Meter assembly cannot be mounted on a mobile home.
7. All secondary connections made by BEC.
8. #6 solid, bare ground copper wire and clamp attached to Bluebonnet's pole ground.
9. The main electrical disconnect for each electrical service shall be installed on the exterior of the building in a location approved by Bluebonnet Electric Cooperative.

Ⓐ

Riser Length:

35' Pole = 20' Riser

40' Pole = 24' Riser

FOR THREE PHASE APPLICATIONS

DESCRIPTION:

200amp, 7 terminal, 3-phase, 4-wire will require a lever by-pass meeting ANSI C12.7, UL 414, and NEMA 3R. Meter cans are available for purchase through Techline or any other electrical supplier provided it meets all Bluebonnet Electric Cooperative specifications. Techline (512-332-2978)

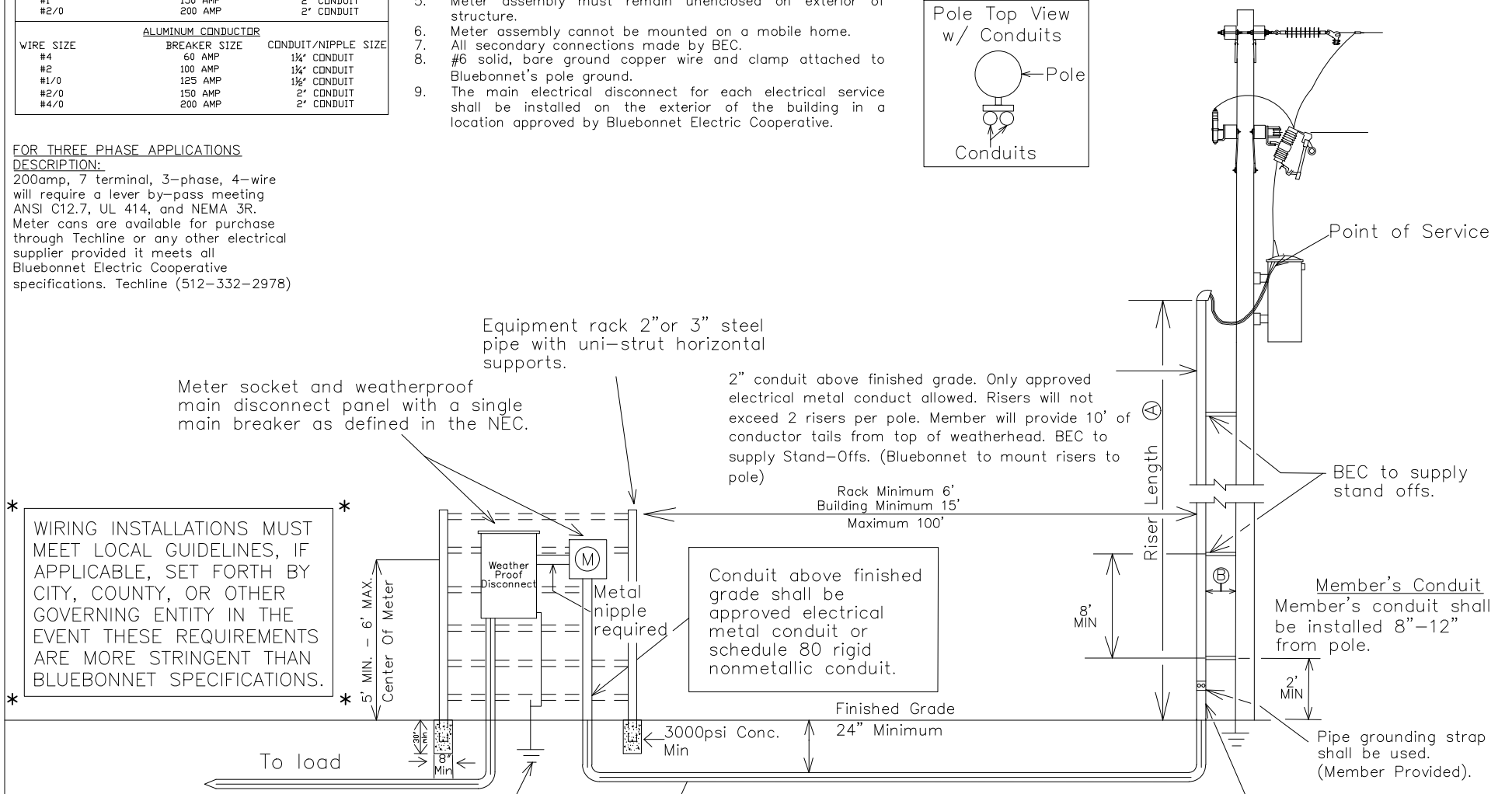

* WIRING INSTALLATIONS MUST MEET LOCAL GUIDELINES, IF APPLICABLE, SET FORTH BY CITY, COUNTY, OR OTHER GOVERNING ENTITY IN THE EVENT THESE REQUIREMENTS ARE MORE STRINGENT THAN BLUEBONNET SPECIFICATIONS. *

FOR THE MEMBER'S SAFETY, WIRING INSTALLATION AND MATERIAL SHALL CONFORM TO THE REQUIREMENTS OF THE NEC, TDLR AND NESC.

Latest update can be found at www.bluebonnetelectric.coop

Bluebonnet

1Ø OR 3Ø 60-200 AMP
METER ON BUILDING OR RACK

DATE	REVISIONS
03-29-2018	MOVED DISCONNECT TO THE SIDE OF METER
11-19-2019	ADDED SOLID COPPER NOTE
11-04-2021	ADDED MAIN BREAKER NOTE

Drawn By :	Checked By :	Approved By :
DJ	Engineering	Standards
Scale : NONE	Date : 06-27-2023	MS-106A

Notes:

1. Line taps shall be made in the galvanized wiring trough by the electrical contractor.
2. Weatherproof fittings Required.
3. (2) disconnects could be substituted with (1) disconnect. All disconnects shall have over current protection installed.
4. No more than (2) risers or (2) conductors per phase shall be allowed.
5. Wire shall be sized to total name plate disconnect sizes.
6. Neutral(s) may be reduced no more than two sizes on residential application. No reduction of the neutral(s) is allowed on commercial application.
7. The electrical contractor will notify Bluebonnet 72 hours in advance to schedule Bluebonnet personnel to deliver the CT's before the service wire is pulled. The electrician shall install them on the rack with the correct polarity before the conductor is brought thru the 30"x42" (minimum size) CT enclosure. Call 800-842-7708 to schedule a connect.
8. More than (6) main disconnects require a properly sized main disconnect ahead of the galvanized trough.
9. Bluebonnet pole must remain free of structures and private attachments other than meter loop riser assembly.
10. Meter assembly must remain unenclosed on exterior of structure.
11. Type K-4, Bolt-in type meter can: Description: 400 amp, 4 terminals, 3-wire, residential/commercial socket single phase self-contained, large cover plate. These meter cans are available for purchase through Techline (512-332-2978) or any other electrical supplier provided it meets all Bluebonnet Electric Cooperative specifications.
12. Maintain 3"-6" distance from the disconnect and the meter can. Member shall use a metal nipple. A straight or offset nipple is acceptable.
13. The main electrical disconnect for each electrical service shall be installed on the exterior of the building in a location approved by Bluebonnet Electric Cooperative.

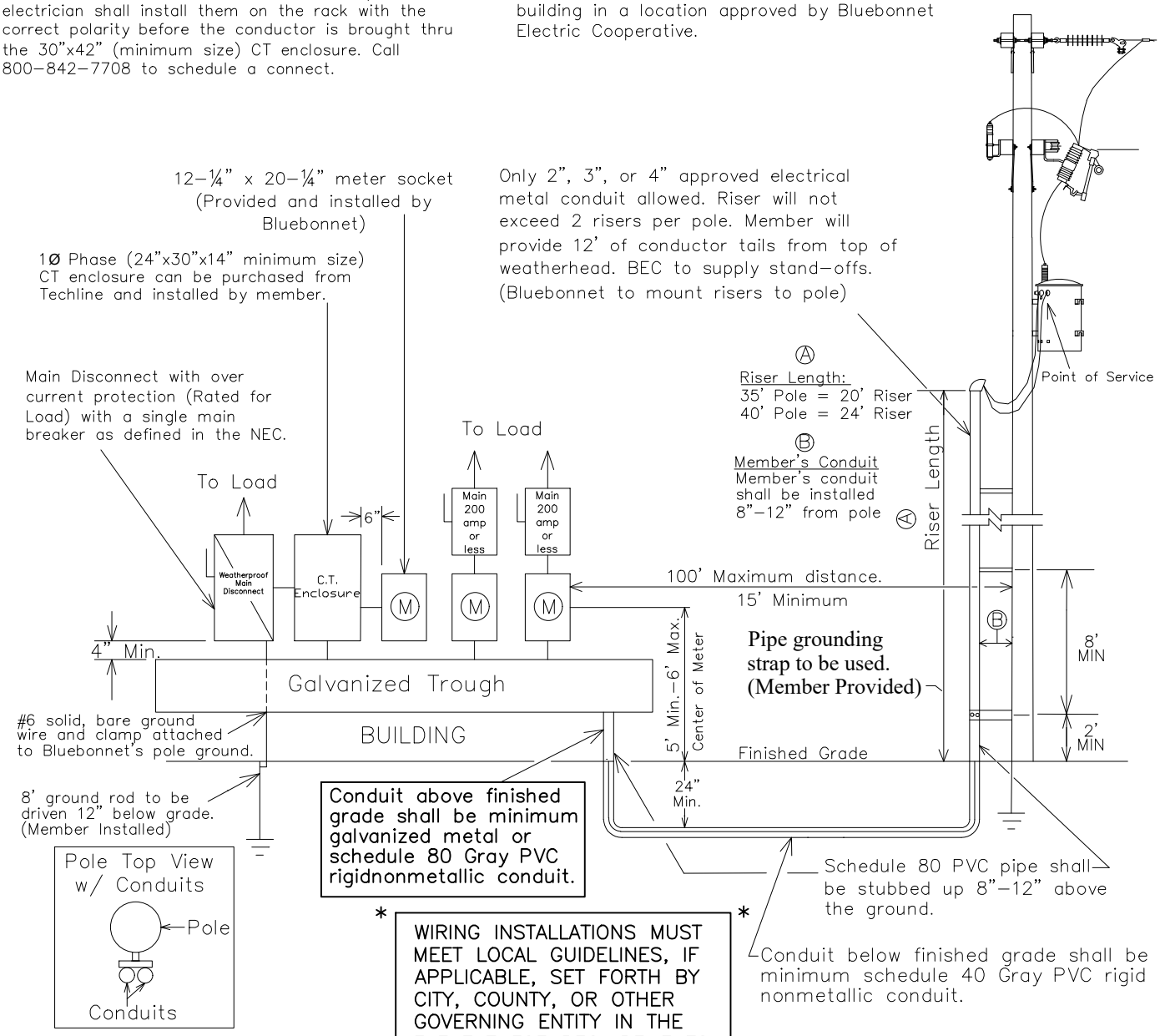

* WIRING INSTALLATIONS MUST MEET LOCAL GUIDELINES, IF APPLICABLE, SET FORTH BY CITY, COUNTY, OR OTHER GOVERNING ENTITY IN THE EVENT THESE REQUIREMENTS ARE MORE STRINGENT THAN BLUEBONNET SPECIFICATIONS. *

FOR THE MEMBER'S SAFETY, WIRING INSTALLATION AND MATERIAL SHALL CONFORM TO THE REQUIREMENTS OF THE NEC, TDLR AND NESC.

Latest update can be found at http://www.bluebonnetelectric.coop

1Ø 400-800 TOTAL AMPS WITH MULTIPLE METERING POINTS ON BUILDING. (RISER TYPE)

Bluebonnet

DATE	REVISIONS
11-28-2017	Bold lettering of Pipe grounding Strap
11-19-2019	Added Solid Copper Note.
04-19-2021	Changed the size of the CT Meter Can requirements.
11-04-2021	Added Main Breaker Note

Drawn By :	Checked By :	Approved By :
RG	MS COMMITTEE	MS COMMITTEE
Scale : NONE	Date : 11-04-2021	MS-114A1

Notes:

1. Line taps shall be made in the galvanized wiring trough by the electrical contractor.
2. Weatherproof fittings Required.
3. (2) disconnects could be substituted with (1) disconnect. All disconnects shall have over current protection installed.
4. No more than (2) risers or (2) conductors per phase shall be allowed.
5. Wire shall be sized to total name plate disconnect sizes.
6. Neutral(s) may be reduced no more than two sizes on residential application. No reduction of the neutral(s) is allowed on commercial application.
7. The electrical contractor will notify Bluebonnet 72 hours in advance to schedule Bluebonnet personnel to deliver the CT's before the service wire is pulled. The electrician shall install them on the rack with the correct polarity before the conductor is brought thru the 30"x42" (minimum size) CT enclosure. Call 800-842-7708 to schedule a connect.
8. More than (6) main disconnects require a properly sized main disconnect ahead of the galvanized trough.
9. Bluebonnet pole must remain free of structures and private attachments other than meter loop riser assembly.
10. Meter assembly must remain unenclosed on exterior of structure.
11. Type K-4, Bolt-in type meter can: Description: 400 amp, 4 terminals, 3-wire, residential/commercial socket single phase self-contained, large cover plate. These meter cans are available for purchase through Techline (512-332-2978) or any other electrical supplier provided it meets all Bluebonnet Electric Cooperative specifications.
12. Maintain 3"-6" distance from the disconnect and the meter can. Member shall use a metal nipple. A straight or offset nipple is acceptable.
13. No more than one disconnect per enclosure.
14. The main electrical disconnect for each electrical service shall be installed on the exterior of the building in a location approved by Bluebonnet Electric Cooperative.

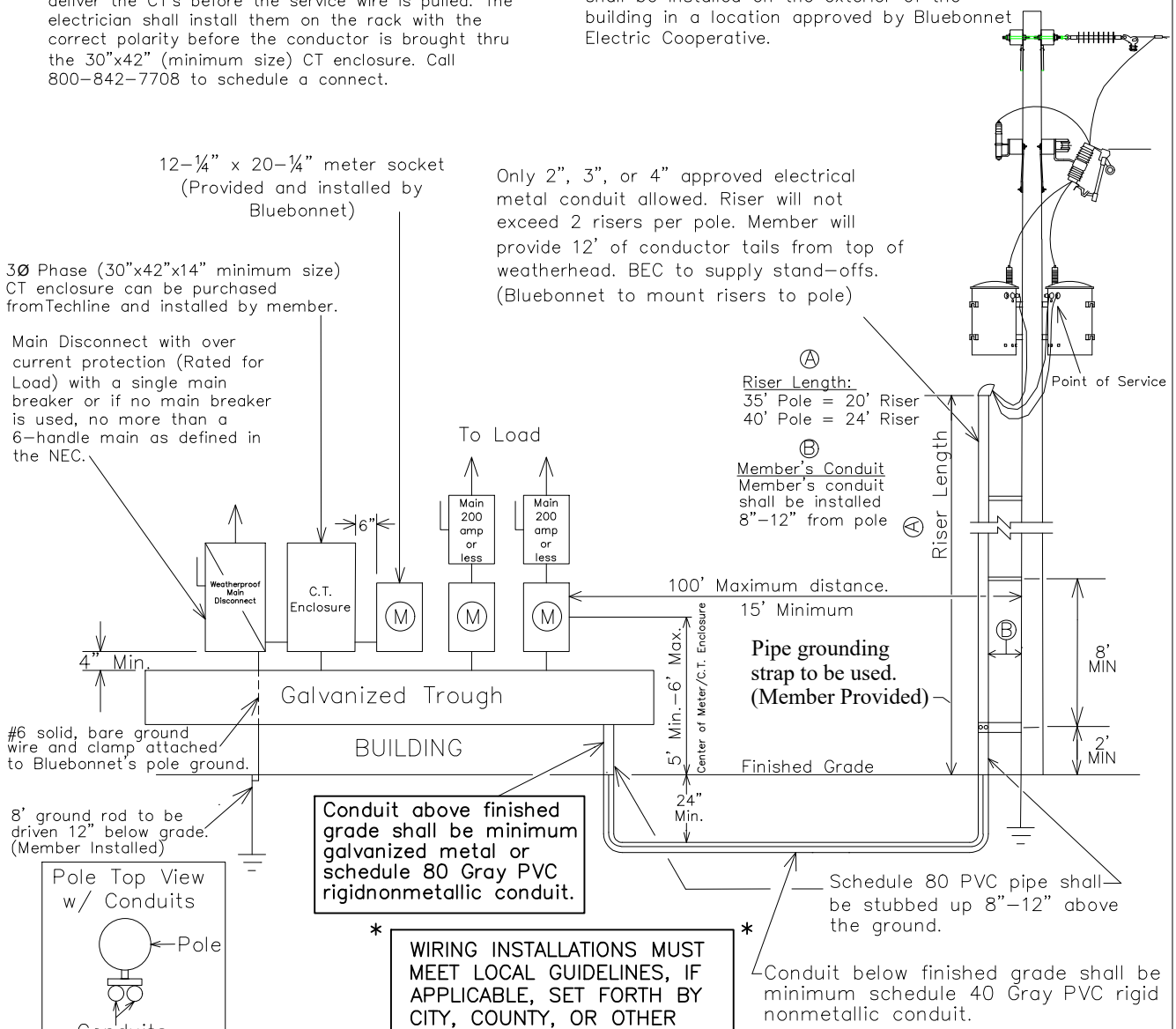

FOR THE MEMBER'S SAFETY, WIRING INSTALLATION AND MATERIAL SHALL CONFORM TO THE REQUIREMENTS OF THE NEC, TDLR AND NESC.

* WIRING INSTALLATIONS MUST MEET LOCAL GUIDELINES, IF APPLICABLE, SET FORTH BY CITY, COUNTY, OR OTHER GOVERNING ENTITY IN THE EVENT THESE REQUIREMENTS ARE MORE STRINGENT THAN BLUEBONNET SPECIFICATIONS. *

Latest update can be found at http://www.bluebonnetelectric.coop

3 PHASE 200-800 TOTAL AMPS WITH MULTIPLE METERING POINTS ON BUILDING. (RISER TYPE)

Bluebonnet

DATE	REVISIONS
11-28-2017	Bold lettering of pipe grounding strap
11-19-2019	Added Solid Copper Note.
04-19-2021	Removed Single Phase from the CT Enclosure Note.
11-04-2021	Added Main Breaker Note

Drawn By :	Checked By :	Approved By :
RG	MS COMMITTEE	MS COMMITTEE
Scale : NONE	Date : 11-04-2021	MS-114B3

CURRENT CARRYING CAPACITIES AND CONDUIT/NIPPLE SIZE REQUIREMENT OF STANDARD WIRE SIZE.
(RHH, RHW, THW, THWN, THHN, AND XHHW)
REFER TO NEC FOR OTHER CALCULATIONS.

COPPER CONDUCTOR

WIRE SIZE	BREAKER SIZE	CONDUIT/NIPPLE SIZE
#6	60 AMP	1¼" CONDUIT
#4	100 AMP	1¼" CONDUIT
#2	125 AMP	1½" CONDUIT
#1	150 AMP	2" CONDUIT
#2/0	200 AMP	2" CONDUIT

ALUMINUM CONDUCTOR

WIRE SIZE	BREAKER SIZE	CONDUIT/NIPPLE SIZE
#4	60 AMP	1¼" CONDUIT
#2	100 AMP	1¼" CONDUIT
#1/0	125 AMP	1½" CONDUIT
#2/0	150 AMP	2" CONDUIT
#4/0	200 AMP	2" CONDUIT

Single Phase Transformer Layout

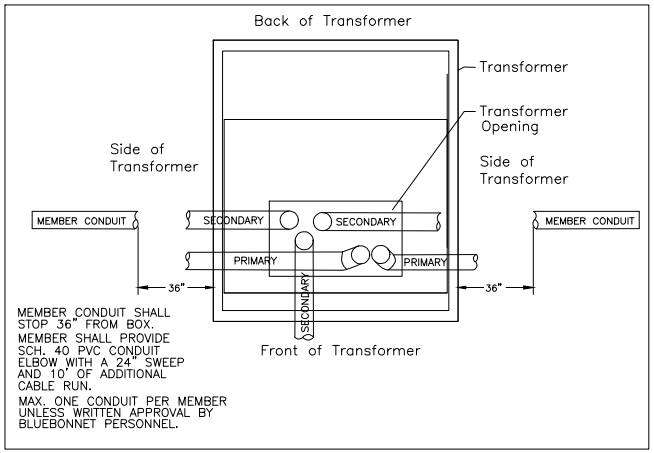

Notes:

1. Weatherproof fittings required.
2. For all URD jobs, electricians shall call TEXAS811 for locates before digging to Bluebonnet equipment. No private utilities will be located.
3. Shall install an additional 10' of wire for termination.
4. Main disconnect shall have a single main breaker as defined in the NEC.
5. Neutral may be reduced no more than two sizes on residential application. No reduction of the neutral is allowed on commercial application.
6. Metering point must remain unenclosed on exterior of structure.
7. Metering point can not be mounted on the side of a mobile home.
8. All connections inside pad mounted transformer and UJB's will be made by Bluebonnet.
9. THREE PHASE APPLICATIONS ONLY DESCRIPTION:
   200amp, 7 terminal, 3-phase, 4-wire will require a lever by-pass meeting ANSI C12.7, UL 414, and NEMA 3R. Meter cans are available for purchase through Techline or any other electrical supplier provided it meets all Bluebonnet Electric Cooperative specifications. Giddings(979-542-8657), Brenham (979-277-7240), Red Rock (512-332-2978)
10. Member must contact Bluebonnet to determine where the secondary conduit is to be run to the transformer. Conduit to be installed 36" to the side of transformer. Call 800-842-7708 to schedule an appointment.
11. Member/Electrician shall coordinate with Bluebonnet personal to install all conduit and the pulling of the secondary wire to the transformer. Member/Electrician shall notify Bluebonnet 48 hours in advance to schedule a time/date to perform the work.
12. If additional trips are made to the site by Bluebonnet personnel, applicable fees maybe applied.
13. The main electrical disconnect for each electrical service shall be installed on the exterior of the building in a location approved by Bluebonnet Electric Cooperative.

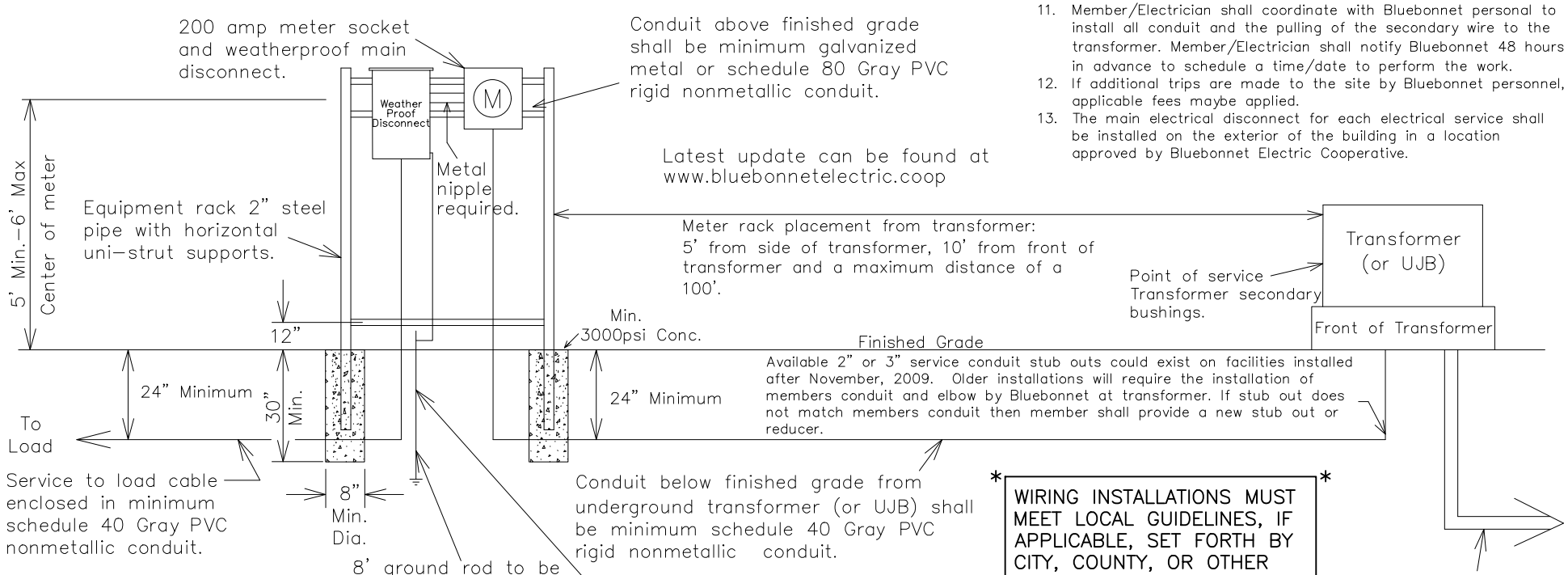

Latest update can be found at www.bluebonnetelectric.coop

FOR THE MEMBER'S SAFETY, WIRING INSTALLATIONS SHALL CONFORM TO THE REQUIREMENTS OF THE NEC, TDLR AND NESC.

* WIRING INSTALLATIONS MUST MEET LOCAL GUIDELINES, IF APPLICABLE, SET FORTH BY CITY, COUNTY, OR OTHER GOVERNING ENTITY IN THE EVENT THESE REQUIREMENTS ARE MORE STRINGENT THAN BLUEBONNET SPECIFICATIONS. *

Bluebonnet

1Ø OR 3Ø, 60-200 AMP UNDERGROUND SERVICE ON RACK OR BUILDING

DATE	REVISIONS
11-19-2019	ADDED SOLID COPPER NOTE.
11-04-2021	ADDED MAIN BREAKER NOTE.

Drawn By :	Checked By :	Approved By :
CV	MS COMMITTEE	MS COMMITTEE
Scale : NONE	Date : 11-04-2021	MS-201

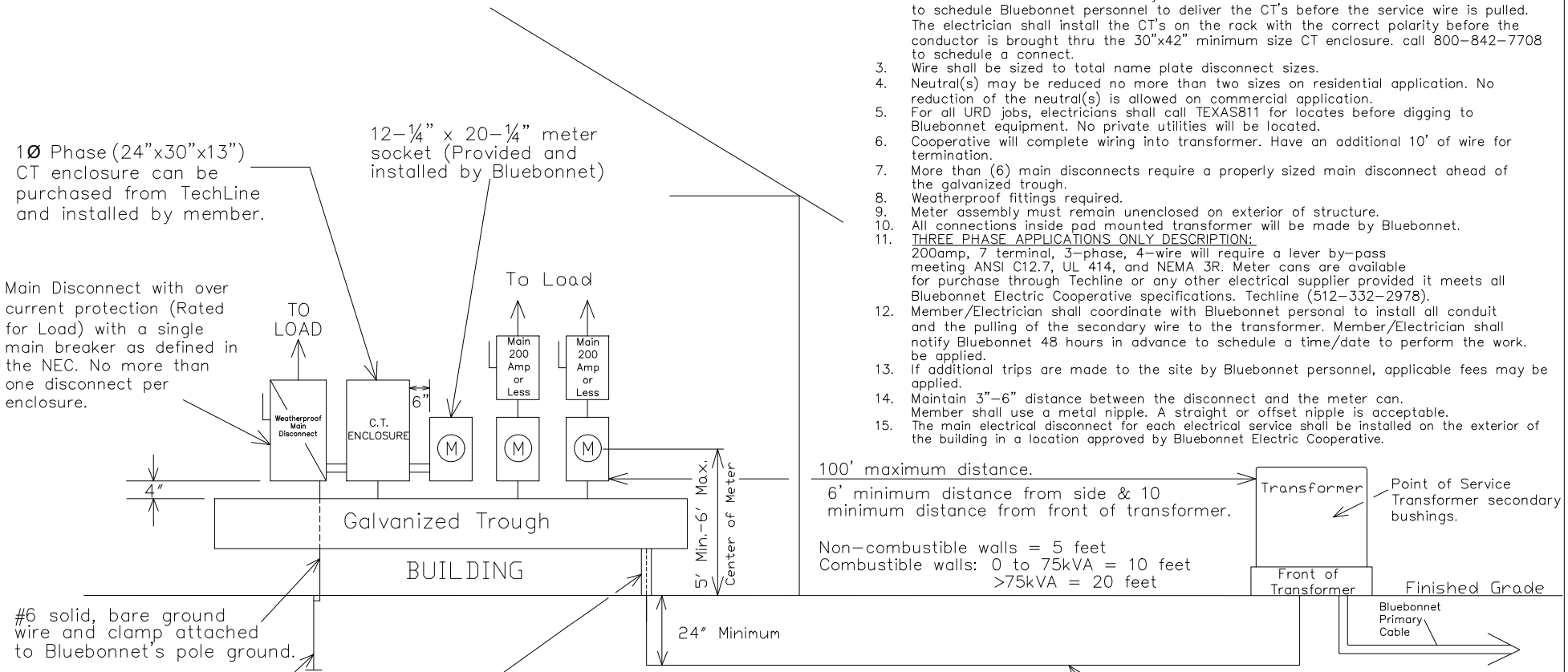

Notes:

1. Line taps shall be made in the galvanized wiring trough by the electrical contractor.
2. The electrical contractor will notify Bluebonnet 72 hours in advance to schedule Bluebonnet personnel to deliver the CT's before the service wire is pulled. The electrician shall install the CT's on the rack with the correct polarity before the conductor is brought thru the 30"x42" minimum size CT enclosure. call 800-842-7708 to schedule a connect.
3. Wire shall be sized to total name plate disconnect sizes.
4. Neutral(s) may be reduced no more than two sizes on residential application. No reduction of the neutral(s) is allowed on commercial application.
5. For all URD jobs, electricians shall call TEXAS811 for locates before digging to Bluebonnet equipment. No private utilities will be located.
6. Cooperative will complete wiring into transformer. Have an additional 10' of wire for termination.
7. More than (6) main disconnects require a properly sized main disconnect ahead of the galvanized trough.
8. Weatherproof fittings required.
9. Meter assembly must remain unenclosed on exterior of structure.
10. All connections inside pad mounted transformer will be made by Bluebonnet.
11. THREE PHASE APPLICATIONS ONLY DESCRIPTION: 200amp, 7 terminal, 3-phase, 4-wire will require a lever by-pass meeting ANSI C12.7, UL 414, and NEMA 3R. Meter cans are available for purchase through Techline or any other electrical supplier provided it meets all Bluebonnet Electric Cooperative specifications. Techline (512-332-2978).
12. Member/Electrician shall coordinate with Bluebonnet personal to install all conduit and the pulling of the secondary wire to the transformer. Member/Electrician shall notify Bluebonnet 48 hours in advance to schedule a time/date to perform the work. be applied.
13. If additional trips are made to the site by Bluebonnet personnel, applicable fees may be applied.
14. Maintain 3"-6" distance between the disconnect and the meter can. Member shall use a metal nipple. A straight or offset nipple is acceptable.
15. The main electrical disconnect for each electrical service shall be installed on the exterior of the building in a location approved by Bluebonnet Electric Cooperative.

Latest update can be found at www.bluebonnetelectric.coop

FOR THE MEMBER'S SAFETY, WIRING INSTALLATION AND MATERIAL SHALL CONFORM TO THE REQUIREMENTS OF THE NEC, TDLR AND NESC.

* WIRING INSTALLATIONS MUST MEET LOCAL GUIDELINES, IF APPLICABLE, SET FORTH BY CITY, COUNTY, OR OTHER GOVERNING ENTITY IN THE EVENT THESE REQUIREMENTS ARE MORE STRINGENT THAN BLUEBONNET SPECIFICATIONS. *

Bluebonnet

1 PHASE >400 AMP UNDERGROUND WITH MULTIPLE METERING POINTS AND CT METERING ON BUILDING.

DATE	REVISIONS
04-19-2021	Changed the size of the CT Meter Can requirements.
11-04-2021	Added Main Breaker Note

Drawn By :	Checked By :	Approved By :
RG	MS COMMITTEE	MS COMMITTEE
Scale : NONE	Date : 11-04-2021	MS-202A1

Notes:

1. Line taps shall be made in the galvanized wiring trough by the electrical contractor.
2. The electrical contractor will notify Bluebonnet 72 hours in advance to schedule Bluebonnet personnel to deliver the CT's before the service wire is pulled. The electrician shall install the CT's on the rack with the correct polarity before the conductor is brought thru the 30"x42" minimum size CT enclosure. call 800-842-7708 to schedule a connect.
3. Wire shall be sized to total name plate disconnect sizes.
4. Neutral(s) may be reduced no more than two sizes on residential application. No reduction of the neutral(s) is allowed on commercial application.
5. For all URD jobs, electricians shall call TEXAS811 for locates before digging to Bluebonnet equipment. No private utilities will be located.
6. Cooperative will complete wiring into transformer. Have an additional 10' of wire for termination.
7. More than (6) main disconnects require a properly sized main disconnect ahead of the galvanized trough.
8. Weatherproof fittings required.
9. Meter assembly must remain unenclosed on exterior of structure.
10. All connections inside pad mounted transformer will be made by Bluebonnet.
11. THREE PHASE APPLICATIONS ONLY DESCRIPTION: 200amp, 7 terminal, 3-phase, 4-wire will require a lever by-pass meeting ANSI C12.7, UL 414, and NEMA 3R. Meter cans are available for purchase through Techline or any other electrical supplier provided it meets all Bluebonnet Electric Cooperative specifications. Techline (512-332-2978).
12. Member/Electrician shall coordinate with Bluebonnet personal to install all conduit and the pulling of the secondary wire to the transformer. Member/Electrician shall notify Bluebonnet 48 hours in advance to schedule a time/date to perform the work.
13. If additional trips are made to the site by Bluebonnet personnel, applicable fees may be applied.
14. Maintain 3"-6" distance between the disconnect and the meter can. Member shall use a metal nipple. A straight or offset nipple is acceptable.
15. The main electrical disconnect for each electrical service shall be installed on the exterior of the building in a location approved by Bluebonnet Electric Cooperative.

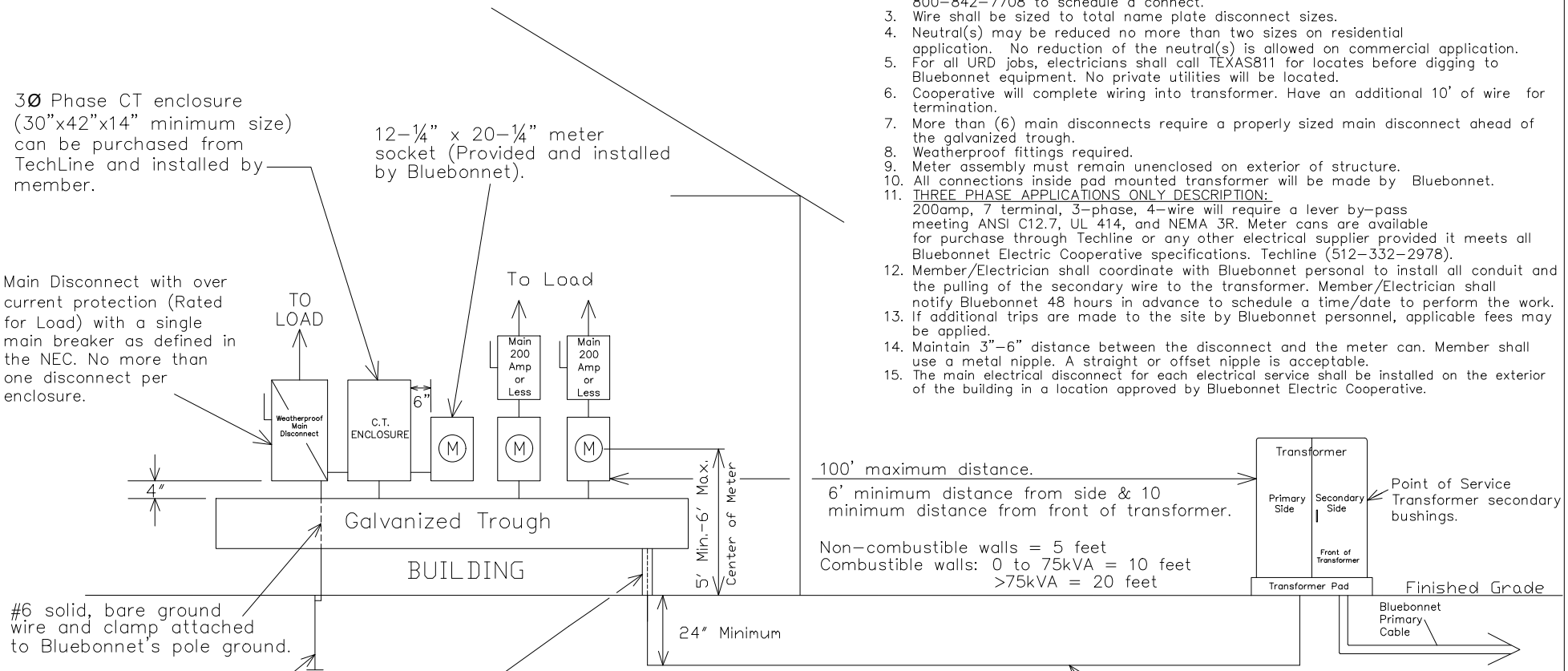

Latest update can be found at www.bluebonnetelectric.coop

FOR THE MEMBER'S SAFETY, WIRING INSTALLATION AND MATERIAL SHALL CONFORM TO THE REQUIREMENTS OF THE NEC, TDLR AND NESC.

WIRING INSTALLATIONS MUST MEET LOCAL GUIDELINES, IF APPLICABLE, SET FORTH BY CITY, COUNTY, OR OTHER GOVERNING ENTITY IN THE EVENT THESE REQUIREMENTS ARE MORE STRINGENT THAN BLUEBONNET SPECIFICATIONS.

Bluebonnet

3 PHASE >200 AMP UNDERGROUND WITH MULTIPLE METERING POINTS AND CT METERING ON BUILDING.

DATE	REVISIONS
04-19-2021	Removed Single Phase from the CT Enclosure Note.
11-04-2021	Added Main Breaker Note

Drawn By :	Checked By :	Approved By :
RG	MS COMMITTEE	MS COMMITTEE
Scale : NONE	Date : 11-04-2021	MS-202B3

Notes:

1. Main disconnect panel may not be used as a electrical race way.
2. Line taps shall be made by the electrical contractor if a galvanized wiring trough is used.
3. Weatherproof fittings required.
4. Any combination of six disconnects totaling no more than 400 amps can be used. REF. NEC, SEC 230.71
5. Recommended wire size is either parallel 2/0 THHN copper or parallel 4/0 THHN aluminum.
6. Neutrals may be reduced no more than two sizes on residential applications. No reduction of the neutrals is allowed on commercial applications.
7. Member shall install an additional of 10' wire for termination.
8. Weatherproof main disconnect panels shall have a single main breaker or 6-handle main as defined in the NEC.
9. Metering point must remain unenclosed on exterior of structure.
10. Metering cannot be mounted on the side of a mobile home.
11. All secondary connections in transformer are made by Bluebonnet.
12. Only 400 Amps meter cans are allowed. No 320 Amp Meter Cans are allowed.
13. All service wires entering the meter can (Top or Bottom Feed) will be terminated at the closest lugs. No phase conductors shall be run through the center of the meter can.
14. Member must contact Bluebonnet to determine where the secondary conduit is to be run to the transformer. Conduit to be installed 36" to the side of transformer. Call 800-842-7708 to schedule an appointment.
15. Member/Electrician shall coordinate with Bluebonnet personal to install all conduit and the pulling of the secondary wire to the transformer. Member/Electrician shall notify Bluebonnet 48 hours in advance to schedule a time/date to perform the work.
16. If additional trips are made to the site by Bluebonnet personnel, applicable fees maybe applied.
17. Maintain 3"-6" distance between the disconnect and the meter can. Member shall use a metal nipple. A straight or offset nipple is acceptable.
18. Largest wire to be pulled in to the meter can is 500 MCM Cooper.
19. A detailed load sheet shall be filled out and returned to Bluebonnet before the service will be connected.
20. #6 solid, bare ground copper wire and clamp to Bluebonnet's pole ground.
21. The main electrical disconnect for each electrical service shall be installed on the exterior of the building in a location approved by Bluebonnet Electric Cooperative.

* WIRING INSTALLATIONS MUST MEET LOCAL GUIDELINES, IF APPLICABLE, SET FORTH BY CITY, COUNTY, OR OTHER GOVERNING ENTITY IN THE EVENT THESE REQUIREMENTS ARE MORE STRINGENT THAN BLUEBONNET SPECIFICATIONS. *

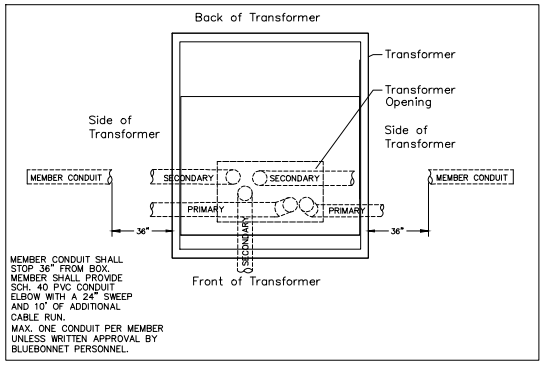

Single Phase Transformer Layout

Latest update can be found at www.bluebonnetelectric.coop

Landis & Gyr, Type K-4, Description: 400 amp, 4 terminals, 3 wire, residential/commercial socket single phase self-contained, large coverplate. The meter lugs can accommodate up to 500 MCM. These meter cans are available for purchase through Techline or any other electrical supplier provided it meets all Bluebonnet Electric Cooperative specifications. Techline phone numbers; Red Rock (512-332-2978).

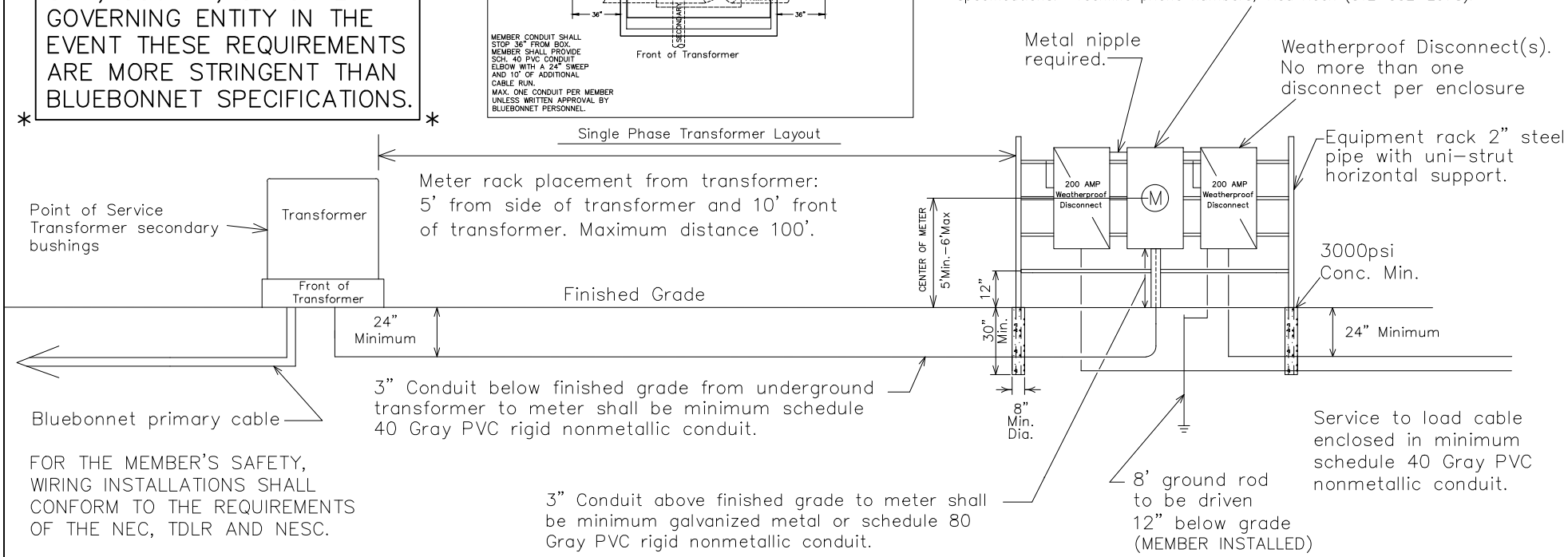

FOR THE MEMBER'S SAFETY, WIRING INSTALLATIONS SHALL CONFORM TO THE REQUIREMENTS OF THE NEC, TDLR AND NESC.

Bluebonnet

1Ø 400 AMP URD SERVICE ON RACK OR BUILDING WITH K BASE BOLTED IN METER SOCKET

DATE	REVISIONS
11-20-19	Added Solid Copper Note.
11-04-21	Added Main Breaker Note

Drawn By :	Checked By :	Approved By :
RG	MS COMMITTEE	MS COMMITTEE
Scale : NONE	Date : 11-04-2021	MS-203

Notes:

1. Line taps shall be made in the galvanized trough by the electrical contractor.
2. Weatherproof fittings required.
3. Two disconnects could be substituted with (1) disconnect. All disconnects shall have over current protection.
4. Wire shall be sized to total disconnect sizes.
5. Neutral(s) may be reduced no more than two sizes on residential application. No reduction of the neutral(s) is allowed on commercial application.
6. Member shall contact Bluebonnet Electric to determine the secondary conduit location. Conduit to be installed 36" to the side of transformer. Call 800-842-7708 to schedule an appointment.
7. Bluebonnet will complete wiring into transformer. Have sufficient amount of wire for termination. Member shall install an additional 10' of wire for termination.
8. All secondary connections to be made inside transformer by Bluebonnet.
9. Bluebonnet to provide the CT's.
10. Meter assembly must remain unenclosed on exterior of structure.
11. Member/Electrician shall coordinate with Bluebonnet personal to install all conduit and the pulling of the secondary wire to the transformer. Member/Electrician shall notify Bluebonnet 48 hours in advance to schedule a time/date to perform the work.
12. If additional trips are made to the site by Bluebonnet personnel, applicable fees may be applied.
13. Maintain 3"-6" distance between the disconnect and the meter can. Member shall use a metal nipple. A straight or offset nipple is acceptable.
14. The main electrical disconnect for each electrical service shall be installed on the exterior of the building in a location approved by Bluebonnet Electric Cooperative.

* WIRING INSTALLATIONS MUST MEET LOCAL GUIDELINES, IF APPLICABLE, SET FORTH BY CITY, COUNTY, OR OTHER GOVERNING ENTITY IN THE EVENT THESE REQUIREMENTS ARE MORE STRINGENT THAN BLUEBONNET SPECIFICATIONS. *

FOR THE MEMBER'S SAFETY, WIRING INSTALLATION AND MATERIAL SHALL CONFORM TO THE REQUIREMENTS OF THE NEC, TDLR AND NESC.

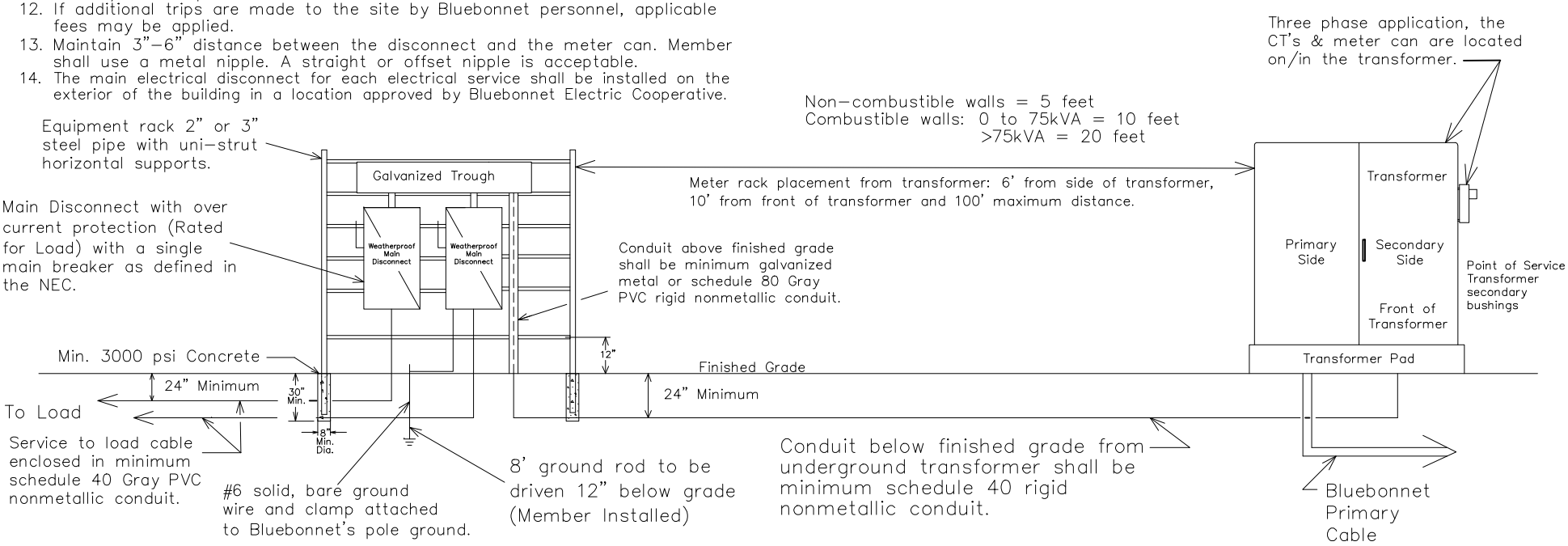

Latest update can be found at www.bluebonnetelectric.coop

Bluebonnet	3 PHASE >200 AMP UNDERGROUND SERVICE WITH DISCONNECT ON RACK OR BUILDING	Drawn By : RG	Checked By : MS COMMITTEE	Approved By : MS COMMITTEE
	DATE / REVISIONS	Scale : NONE	Date : 11-04-2021	MS-204A3
	11-20-19 Added Solid Copper Note.			
	11-04-21 Added Main Breaker Note			

WIRING INSTALLATIONS MUST MEET LOCAL GUIDELINES, IF APPLICABLE, SET FORTH BY CITY, COUNTY, OR OTHER GOVERNING ENTITY IN THE EVENT THESE REQUIREMENTS ARE MORE STRINGENT THAN BLUEBONNET SPECIFICATIONS.

Single Phase Transformer Layout

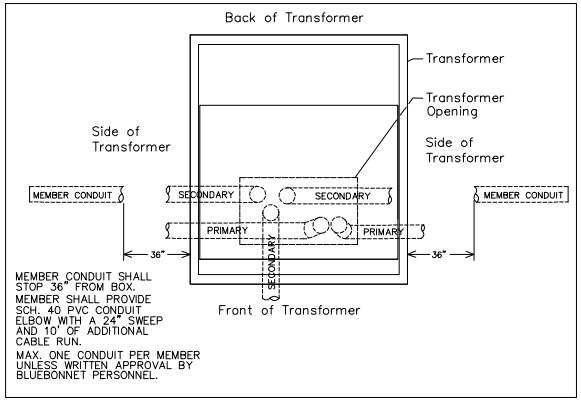

Notes:

1. Line taps shall be made in the galvanized trough by the electrical contractor.
2. More than (6) main disconnects require a properly sized main disconnect ahead of the galvanized trough.
3. Weatherproof fittings required.
4. Wire shall be sized to total disconnect sizes.
5. Neutral(s) may be reduced no more than two sizes on residential application. No reduction of the neutral(s) is allowed on commercial application.
6. For all URD jobs, electricians shall call TEXAS811 for locates before digging to Bluebonnet equipment. No private utilities will be located.
7. Bluebonnet will complete wiring into transformer. Have 10' additional amount of wire for termination.
8. Meter loop must remain unenclosed on exterior of structure.
9. Meter loop can not be mounted on the side of a mobile home.
10. All secondary connections made by Bluebonnet.
11. THREE PHASE APPLICATIONS ONLY DESCRIPTION: 200amp, 7 terminal, 3-phase, 4-wire will require a lever by-pass meeting ANSI C12.7, UL 414, and NEMA 3R. Meter cans are available for purchase through Techline or any other electrical supplier provided it meets all Bluebonnet Electric Cooperative specifications. Giddings 979-542-8657, Red Rock 512-332-2978, Brenham 979-277-7240.
12. Member/Electrician shall coordinate with Bluebonnet personal to install all conduit and the pulling of the secondary wire to the transformer. Member/Electrician shall notify Bluebonnet 48 hours in advance to schedule a time/date to perform the work.
13. If additional trips are made to the site by Bluebonnet personnel, applicable fees maybe applied.
14. The main electrical disconnect for each electrical service shall be installed on the exterior of the building in a location approved by Bluebonnet Electric Cooperative.

FOR THE MEMBER'S SAFETY, WIRING INSTALLATIONS SHALL CONFORM TO THE REQUIREMENTS OF THE NEC, TDLR AND NESC.

No more than four 60-200 Amp meter sockets and weatherproof main disconnects. No more than one disconnect per enclosure.

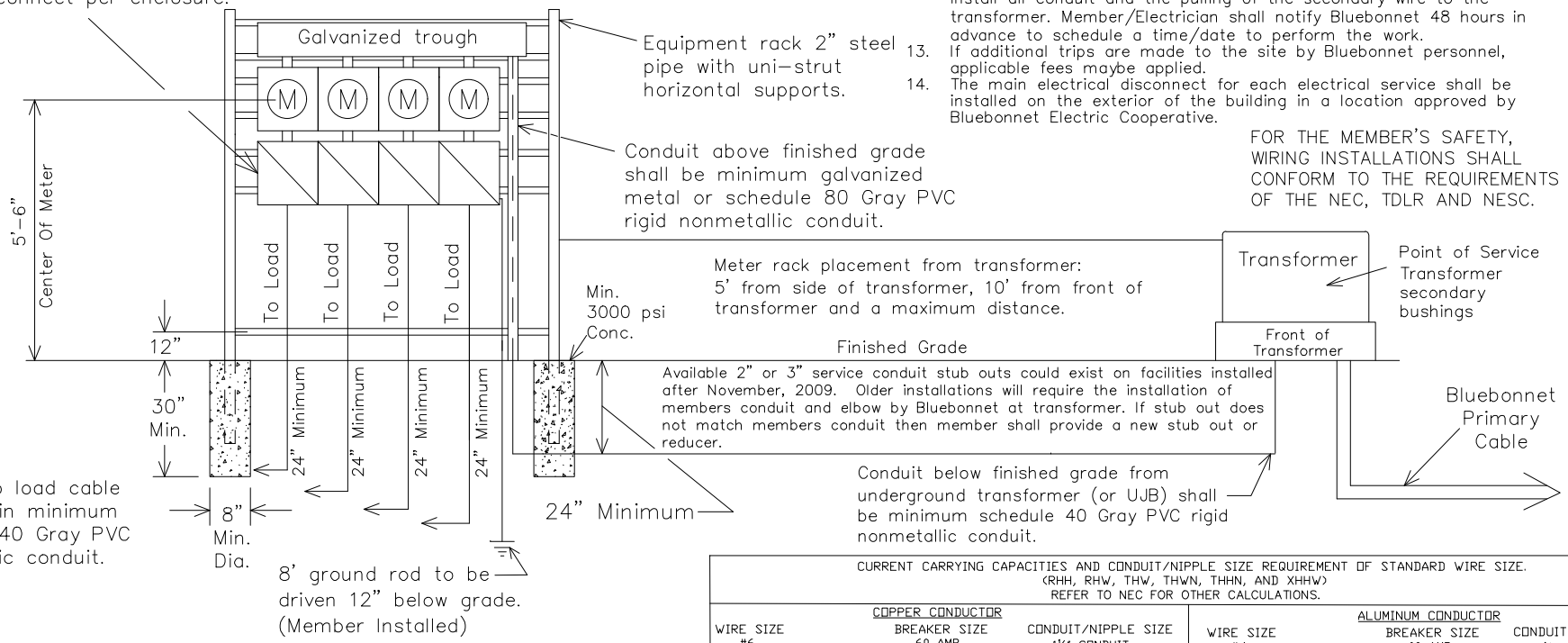

Latest update can be found at www.bluebonnetelectric.coop

CURRENT CARRYING CAPACITIES AND CONDUIT/NIPPLE SIZE REQUIREMENT OF STANDARD WIRE SIZE. (RHH, RHW, THW, THWN, THHN, AND XHHW) REFER TO NEC FOR OTHER CALCULATIONS.

COPPER CONDUCTOR			ALUMINUM CONDUCTOR		
WIRE SIZE	BREAKER SIZE	CONDUIT/NIPPLE SIZE	WIRE SIZE	BREAKER SIZE	CONDUIT/NIPPLE SIZE
#6	60 AMP	1¼" CONDUIT	#4	60 AMP	1¼" CONDUIT
#4	100 AMP	1¼" CONDUIT	#2	100 AMP	1¼" CONDUIT
#2	125 AMP	1½" CONDUIT	#1/0	125 AMP	1½" CONDUIT
#1	150 AMP	2" CONDUIT	#2/0	150 AMP	2" CONDUIT
#2/0	200 AMP	2" CONDUIT	#4/0		

Bluebonnet

1Ø OR 3Ø, 60-200 AMP UNDERGROUND GANG MOUNTED METERS ON RACK OR BUILDING NOT TO EXCEED A TOTAL OF 800 AMPS.

DATE	REVISIONS
12-07-2017	ADDED WIRE SIZING CHART.
12-07-2017	ADDED MAIN BREAKER NOTE

Drawn By :	Checked By :	Approved By :
RG	MS COMMITTEE	MS COMMITTEE
Scale : NONE	Date : 11-04-2021	MS-205

Notes:

1. All temporary wiring shall meet national electrical code standards.
2. All outlets attached to meter loop shall have ground-fault circuit interrupter protection.
3. For all URD jobs, electricians shall call TEXAS811 for locates before digging to Bluebonnet equipment. No private utilities will be located
4. Service wires shall be brought to the top side of the meter base.
5. Bluebonnet does inspect temporary meter loops and a fee shall be charged per trip for wiring inspection. Bluebonnet will refuse service if hazardous conditions exist and/or if connections do not meet specifications.
6. Bluebonnet will complete wiring into transformer or UJB. Member shall have sufficent amount of wire for termination.
7. All connections inside pad mounted transformer and UJB's will be made by Bluebonnet.
8. Temporary Meter Loop Services are good for up to 24 months of service or less.
9. The main electrical disconnect for each electrical service shall be installed on the exterior of the building in a location approved by Bluebonnet Electric Cooperative.

* WIRING INSTALLATIONS MUST MEET LOCAL GUIDELINES, IF APPLICABLE, SET FORTH BY CITY, COUNTY, OR OTHER GOVERNING ENTITY IN THE EVENT THESE REQUIREMENTS ARE MORE STRINGENT THAN BLUEBONNET SPECIFICATIONS. *

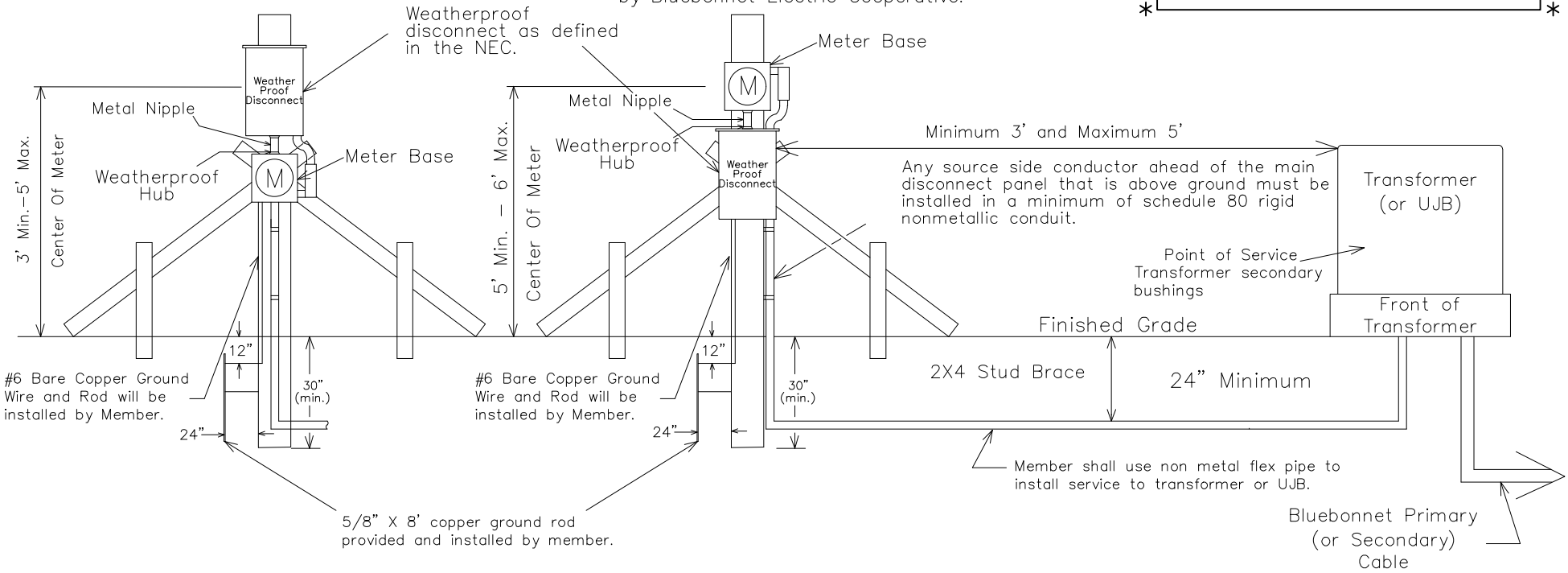

FOR MEMBER SAFETY, WIRING INSTALLATION AND MATERIAL SHALL CONFORM TO THE REQUIREMENTS OF THE NEC, TDLR AND NESC.

Latest update can be found at www.bluebonnetelectric.coop

CURRENT CARRYING CAPACITIES AND CONDUIT/NIPPLE SIZE REQUIREMENT OF STANDARD WIRE SIZE (RHH, RHW, THW, THWN, THHN, AND XHHW)
REFER TO NEC FOR OTHER CALCULATIONS.

COPPER CONDUCTOR			ALUMINUM CONDUCTOR		
WIRE SIZE	BREAKER SIZE	CONDUIT SIZE	WIRE SIZE	BREAKER SIZE	CONDUIT SIZE
#6	60 AMP	1¼" CONDUIT	#4	60 AMP	1¼" CONDUIT
#4	100 AMP	1¼" CONDUIT	#2	100 AMP	1¼" CONDUIT
#2	125 AMP	1½" CONDUIT	#1/0	125 AMP	1½" CONDUIT
#1	150 AMP	2" CONDUIT	#2/0	150 AMP	2" CONDUIT
#2/0	200 AMP	2" CONDUIT	#4/0	200 AMP	2" CONDUIT

Bluebonnet

TEMPORARY METER LOOP FOR UNDERGROUND SERVICE

DATE	REVISIONS
03-29-2018	ADDED ADDITIONAL METER SETUP.
11-04-2021	ADDED MAIN BREAKER NOTE

Drawn By :	Checked By :	Approved By :
RG	MS COMMITTEE	MS COMMITTEE
Scale : NONE	DATE: 11-04-2021	MS-302

Notes:

1. All pole mounted meter loops shall be mounted to Bluebonnet poles.
2. All secondary connections made by Bluebonnet.
3. All outlets attached to meter loop shall have ground–fault circuit interrupter protection.
4. Temporary Meter Loop Services are good for 24 months of service or less
5. For your safety, only Bluebonnet personnel are authorized to install meter loops or other BEC equipment on a Bluebonnet pole. Members shall have loop assembled and available for installation by Bluebonnet.

Bluebonnet does inspect temporary meter loops and a fee shall be charged per trip for wiring inspections. Bluebonnet will deny service if hazardous conditions do not meet specifications.

* WIRING INSTALLATIONS MUST MEET LOCAL GUIDELINES, IF APPLICABLE, SET FORTH BY CITY, COUNTY, OR OTHER GOVERNING ENTITY IN THE EVENT THESE REQUIREMENTS ARE MORE STRINGENT THAN BLUEBONNET SPECIFICATIONS. *

FOR THREE PHASE APPILCATIONS DESCRIPTION:

200amp, 7 terminal, 3–phase, 4–wire will require a lever by–pass meeting ANSI C12.7, UL 414, an NEMA 3R. Meter cans are available for purchase through Techline or any other electrical supplier provided it meets all Bluebonnet Electric Cooperative specifications. Techline (512–332–2978)

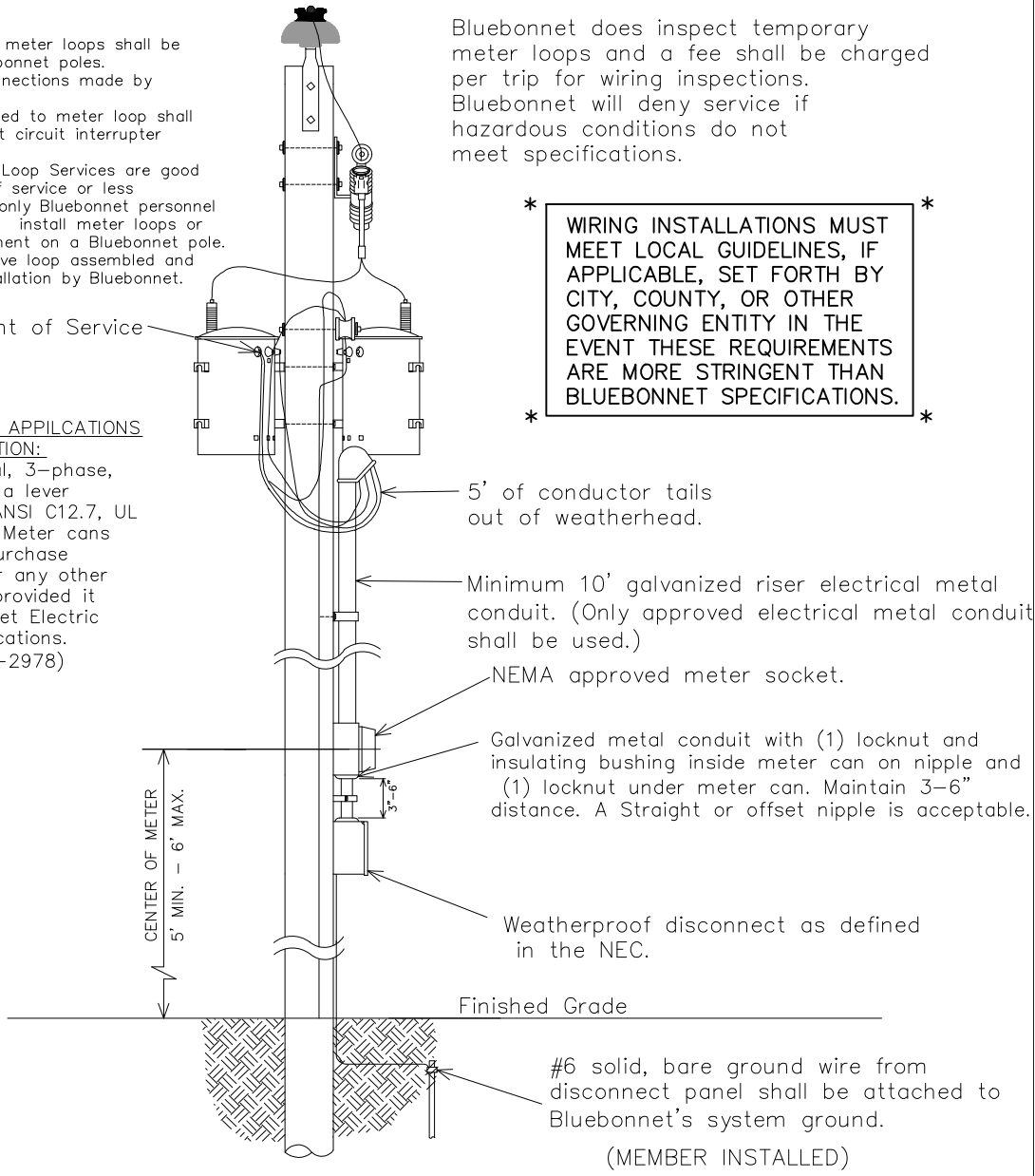

FOR THE MEMBER'S SAFETY, WIRING INSTALLATION AND MATERIAL SHALL CONFORM TO THE REQUIREMENTS OF THE NEC, TDLR AND NESC.

Latest update can be found at www.bluebonnetelectric.coop

CURRENT CARRYING CAPACITIES AND CONDUIT SIZE REQUIREMENT OF STANDARD WIRE SIZE – (RHH, RHW, THW, THWN, THHN, AND XHHW REFER TO NEC FOR OTHER CALCULATIONS.

COPPER CONDUCTOR

Wire Size	Breaker Size	Conduit Size
#6	60 Amp	1¼" Conduit
#4	100 Amp	1¼" Conduit
#2	125 Amp	1½" Conduit
#1	150 Amp	2" Conduit
#2/0	200 Amp	2" Conduit

ALUMINUM CONDUCTOR

Wire Size	Breaker Size	Conduit Size
#4	60 Amp	1¼" Conduit
#2	100 Amp	1¼" Conduit
#1/0	125 Amp	1½" Conduit
#2/0	150 Amp	2" Conduit
#4/0	200 Amp	2" Conduit

1Ø OR 3Ø 60–200 AMP TEMPORARY METER LOOP FOR TRANSFORMER AND SERVICE POLES

..\..\BEC Logo\bmp\color\bec.logo.horiz.a.bmp

DATE	REVISIONS
03–31–20	Added note 5.
11–04–21	Added main breaker note

Drawn By :	Checked By :	Approved By :
RG	MS COMMITTEE	MS COMMITTEE
Scale : NONE	DATE: 11–04–2021	MS–303